EL DORADO COUNTY ZONING ORDINANCE

TITLE 130
EL DORADO COUNTY CODE

ADOPTED AUGUST 14, 2018
AMENDED JANUARY 8, 2019

EL DORADO COUNTY ZONING ORDINANCE

ORDINANCE No. 5030, December 15, 2015
A comprehensive update to Title 130 (Zoning Ordinance)

AMENDMENTS

ORDINANCE No. 5090, August 14, 2018
A Comprehensive Minor Amendment to Title 130 (Zoning Ordinance)

ORDINANCE No. 5097, January 8, 2019
A Minor Amendment to Title 130 (Zoning Ordinance), Articles 2, 4 and 8 (regarding Vacation Home Rental)

SUMMARY OF ORDINANCE NO. 5090

AN ORDINANCE ADOPTING A COMPREHENSIVE MINOR AMENDMENT TO TITLE 130 (ZONING ORDINANCE)

THE BOARD OF SUPERVISORS OF THE COUNTY OF EL DORADO DOES ORDAIN AS FOLLOWS:

Ordinance No. 5090 consists of a comprehensive minor amendment to Title 130 of the El Dorado County Ordinance Code (Zoning Ordinance). The minor changes include but are not limited to: 1) corrections to typographical/grammatical/formatting errors; 2) text modification for clarity; 3) corrections of inaccurate or obsolete code and document references, including renumbered sections of Title 130; and 4) consolidation/renumbering of the following adopted zoning regulations that were not part of the County's 2015 Zoning Ordinance Update adopted on December 15, 2015: Airport Safety (Ordinance No. 4182 adopted on May 12, 1987); Parcel Size Exception (Ordinance No. 4156 adopted on April 16, 1991); and Signs (Ordinance No. 5025 adopted on July 28, 2015). The full text of the Ordinance is available for viewing in the office of the Clerk of the Board of Supervisors at 330 Fair Lane, Placerville, California.

PASSED AND ADOPTED by the Board of Supervisors of the County of El Dorado at a regular meeting of said Board, held on the 14th day of August, 2018, by the following vote of said Board:

Ayes:Hidahl,Frentzen,Veerkamp,Ranalli,Novasel
Noes:None
Absent:None

Attest:
James S. Mitrisin

Clerk of the Board of Supervisors
By: /s/ Kim Dawson_____
Deputy Clerk

/s/Michael Ranalli_____
Chair, Board of Supervisors
Michael Ranalli

Note for Record: Ordinance No. 5090 does not include the following adopted Ordinances which are found in Title 130, Article 9 (Miscellaneous) on Municode:
https://library.municode.com/ca/el_dorado_county/codes/code_of_ordinances?nodeId=TIT130ZO_ART9M

Ordinance No. 5026 (Public Noticing) adopted September 15, 2015
Ordinance No. 5067 (Medical Cannabis) adopted November 7, 2017

THIS PAGE INTENTIONALLY LEFT BLANK

SUMMARY OF ORDINANCE NO. 5097

AN ORDINANCE ADOPTING A MINOR UPDATE TO
TITLE 130 (ZONING ORDINANCE)

THE BOARD OF SUPERVISORS OF THE COUNTY OF EL DORADO DOES ORDAIN AS FOLLOWS:

The proposed Ordinance is a minor update to the County's Zoning Ordinance (Title 130 of the El Dorado County Code of Ordinances). The minor changes include: 1) Revised Matrices of Allowed Uses (Sections 130.21.020, 130.22.020, and 130.24.020) to remove the requirement for an Administrative Permit for Vacation Home Rentals; 2) Removal of the Vacation Home Rental Heading from Section 130.40.370; and 3) Corrections to inaccurate or obsolete code and document references. A full and complete copy of the full text of the proposed Ordinance is available for viewing in the office of the Clerk of the Board of Supervisors at 330 Fair Lane, Placerville, California. The full text of the proposed Ordinance is also available at: https://bit.ly/2h1ulic.

The Board of Supervisors conducted a public hearing to consider adoption of this Ordinance on Tuesday, January 8, 2019 at 1:00 p.m. in the Board Meeting Room, 330 Fair Lane, Placerville, California. This Ordinance shall take effect thirty (30) days following the adoption (February 7, 2019).

PASSED AND ADOPTED by the Board of Supervisors of the County of El Dorado at a regular meeting of said Board, held on the 8th day of January, 2019, by the following vote of said Board:

ATTEST
JAMES S. MITRISIN
Clerk of the Board of Supervisors

By:/s/ Kim Dawson
Deputy Clerk

Ayes:Hidahl,Frentzen,Veerkamp,Parlin,Novasel
Noes:None
Absent:None

/s/ Sue Novasel
Chair, Board of Supervisors

APPROVED AS TO FORM
COUNTY COUNSEL

By:/s/Michael J. Ciccozzi

THIS PAGE INTENTIONALLY LEFT BLANK

TABLE OF CONTENTS

ARTICLE 1 – ZONING ORDINANCE APPLICABILITY 1
Chapter 130.10 – Enactment and Applicability of the Zoning Ordinance 3
130.10.010 Title 3
130.10.020 Authority, Relationship to General Plan 3
130.10.030 Responsibility for Administration 4
130.10.040 Applicability of Zoning Ordinance 6
130.10.050 Rules of Interpretation 8
130.10.060 Severability 8
130.10.070 Indemnification and Hold Harmless Agreement 9
Chapter 130.12 – Zoning Maps 11
130.12.010 Zones Established 11
130.12.020 Zoning Map and Zones 13
ARTICLE 2 – ZONES, ALLOWED USES, AND ZONING STANDARDS 15
Chapter 1-30.20 – Development and Use Approval Requirements 17
130.20.010 Contents of Chapter 17
130.20.020 General Requirements for Development and New Uses 17
130.20.030 Allowable Uses and Planning Permit Requirements 18
130.20.040 Exemptions from Planning Permit Requirements 20
130.20.050 Temporary Uses 22
Chapter 130.21 – Agricultural, Rural, and Resource Zones 23
130.21.010 Zones Established; Applicability 23
130.21.020 Matrix of Allowed Uses 25
130.21.030 Agricultural, Rural, and Resource Zone Development Standards 30
Chapter 130.22 – Commercial Zones 31
130.22.010 Zones Established; Applicability 31
130.22.020 Matrix of Allowed Uses 32
130.22.030 Commercial Zones Development Standards 38
Chapter 130.23 – Industrial and Research and Development Zones 39
130.23.010 Zones Established; Applicability 39
130.23.020 Matrix of Allowed Uses 40
130.23.030 Development Standards 44

130.23.040 Design Standards ... 45
Chapter 130.24 — Residential Zones ... 47
130.24.010 Zones Established; Applicability ... 47
130.24.020 Matrix of Allowed Uses ... 49
130.24.030 Residential Zone Development Standards ... 53
Chapter 130.25 – Special Purpose Zones ... 54
130.25.010 Zones Established; Applicability ... 54
130.25.020 Matrix of Allowed Uses ... 55
130.25.030 Special Purpose Zone Development Standards ... 58
Chapter 130.26— Meyers Area Plan (MAP) Zone ... 60
130.26.010 Zone Established ... 60
130.26.020 Applicability ... 60
130.26.030 Zone Designations ... 60
130.26.040 Uses Allowed by Right or by Conditional Use Permit ... 61
130.26.050 Matrix of Allowed Uses ... 61
130.26.060 Development Standards ... 63
Chapter 130.27 — Combining Zones ... 66
130.27.010 Combining Zones Established; Applicability ... 66
130.27.020 *Reserved* ... 67
130.27.030 Avalanche Hazard (-AV) Combining Zone - *Reserved* ... 67
130.27.040 Dam Failure Inundation (-DFI) Combining Zone ... 67
130.27.050 Design Review - Community (-DC) Combining Zone ... 68
130.27.060 Design Review - Historic (–DH) Combining Zone ... 72
130.27.070 Design Review — Scenic Corridor (-DS) Combining Zone *Reserved* ... 73
130.27.080 *Reserved* ... 73
130.27.090 Mobile/Manufactured Home Parks (-MP) Combining Zone ... 73
130.27.100 Airport Noise and Safety Contour (-ANS) ... 73
130.27.110 *Reserved* ... 76
130.27.120 Tahoe Basin (-T) Combining Zone ... 76
Chapter 130.28 — Planned Development (-PD) Combining Zone ... 78
130.28.010 Planned Development (–PD) Combining Zone Established ... 78
130.28.020 Applicability ... 78

130.28.030 Combination with Other Zones 78
130.28.040 Zone Change and Development Plan Requirements 79
130.28.050 Residential Development Requirements 79
130.28.060 Residential Density Bonuses for On-site Open Space Dedication 81
130.28.070 Condominium Conversions 82
Chapter 130.29 — Mineral Resource (-MR) Combining Zone: Exploration, Mining, Reclamation, and Protection 84
130.29.010 Mineral Resource (–MR) Combining Zone Established 84
130.29.020 Definitions 85
130.29.030 Applicability 85
130.29.040 Exemptions 85
130.29.050 General Requirements 87
130.29.060 Minimum Lot Size 87
130.29.070 Mineral Exploration 88
130.29.080 Measure A Initiative Ordinance 89
130.29.090 Mining and Reclamation 90
130.29.100 Standards for Reclamation 95
130.29.110 Interim Management Plans 98
130.29.120 Annual Report Requirements 99
ARTICLE 3 – SITE PLANNING AND PROJECT DESIGN STANDARDS 101
Chapter 130.30 – General Development Standards 103
130.30.010 Applicability 103
130.30.020 Minimum Area and Width of Lots 103
130.30.030 Parcel Size Exception – Parcels Conveyed to Government Agency .. 104
130.30.040 Parcel Size Exception – Same Generally 104
130.30.050 Setback Requirements and Exceptions 105
130.30.060 Height Limits and Exceptions 115
130.30.070 Fences, Walls, and Retaining Walls 117
130.30.080 Hillside Development Standards; 30 Percent Slope Restriction 122
130.30.090 Gates 126
130.30.100 *Reserved* 128
Chapter 130.31 – Affordable Housing Density Bonus 129
130.31.010 Content 129

130.31.020 Definitions 129
130.31.030 Eligibility for Bonus, Incentives, and/or Concessions 130
130.31.040 Bonuses, Incentives, and Concessions Allowed 131
130.31.050 Processing of Requests 132
130.31.060 Continued Availability of Affordability 134
130.31.070 Location of Bonus Units 136
130.31.080 Time of Construction and Occupancy 136
130.31.090 Design 136
Chapter 130.32 – Flood Damage Prevention 137
130.32.010 Statutory Authorization, Findings of Fact, Content and Methods 137
130.32.020 Definitions 139
130.32.030 General Provisions 144
130.32.040 Administration 145
130.32.050 Provisions for Flood Hazard Reduction 149
130.32.060 Variance Procedures 155
Chapter 130.33 – Landscaping Standards 159
130.33.010 Content 159
130.33.020 Applicability 159
130.33.030 Exemption 159
Chapter 130.34 – Outdoor Lighting 161
130.34.010 Content 161
130.34.020 Outdoor Lighting Standards 161
130.34.030 Exemptions 162
130.34.040 Effect on Existing Outdoor Lighting 162
Chapter 130.35 – Parking and Loading 163
130.35.010 Content 163
130.35.020 Definitions 163
130.35.030 Off-street Parking and Loading Requirements 163
Chapter 130.36 – Signs 171
130.36.010 Content and Applicability 171
130.36.020 General Sign Requirements 172
130.36.030 Exemptions. 173

130.36.040 – Permanent Signs. 177
130.36.060 – Community Sign Programs. 180
130.36.070 – Sign Development and Design Standards. 180
130.36.080 - Permit Requirements and Review Procedures. 198
130.36.090 – Prohibited Signs. 202
130.36.100 - Illegal, Abandoned, and Nonconforming Permanent Signs. 204
130.36.110 - Signs on County Property. 205
130.36.120 - Definitions. 207
Chapter 130.37 – Noise Standards 219
130.37.010 Content 219
130.37.020 Exemptions 219
130.37.030 Applicability 220
130.37.040 Definitions 220
130.37.050 Acoustic Analysis Requirements 221
130.37.060 Noise Standards 222
130.37.070 Noise Reduction Measures 224
130.37.080 Noise Level Measurements 224
Chapter 130.38 – *Reserved* 225
Chapter 130.39 – Oak Resources Conservation 227
130.39.010 Content 227
130.39.020 Applicability 227
130.39.030 Definitions 228
130.39.040 - Prohibition 231
130.39.050 Exemptions and Mitigation Reductions 231
130.39.060 Oak Tree and Oak Woodland Removal Permits – Ministerial Development Projects. 234
130.39.070 Oak Tree and Oak Woodland Removal Permits – Discretionary Development Projects. 236
130.39.090 Enforcement 239
130.39.100 Mitigation Maintenance, Monitoring and Reporting 240
ARTICLE 4 – SPECIFIC USE REGULATIONS 241
Chapter 130.40 – Specific Use Regulations 241
130.40.010 Content of Chapter 243

130.40.020 Applicability 243
130.40.030 Accessory Structures and Uses 243
130.40.040 Adult Business Establishments 245
130.40.050 *Reserved* 246
130.40.060 Agricultural Preserves and Zones: Contracts, Criteria and Regulations 247
130.40.070 Agricultural Support Services 251
130.40.080 Animal Raising and Keeping 252
130.40.090 *Reserved* 256
130.40.100 Campgrounds and Recreational Vehicle Parks 256
130.40.110 Child Day Care Facilities 258
130.40.120 Commercial Caretaker, Agricultural Employee, and Seasonal Worker Housing 261
130.40.130 Communication Facilities 264
130.40.140 *Reserved* 269
130.40.150 Guest House 269
130.40.160 Home Occupations 269
130.40.170 Lodging Facilities 275
130.40.180 Mixed Use Development 281
130.40.190 Mobile/Manufactured Homes 284
130.40.200 *Reserved* 286
130.40.210 Outdoor Recreational Facilities – Commercial or Public 286
130.40.220 Outdoor Retail Sales 289
130.40.230 Private Schools in Light Manufacturing Facilities 292
130.40.240 Produce Sales 293
130.40.250 Public Utility Infrastructure 294
130.40.260 Ranch Marketing 295
130.40.270 *Reserved* 307
130.40.280 Recycling Facilities 307
130.40.290 Right To Farm 310
130.40.300 Secondary Dwellings 312
130.40.310 Solar Collection Systems 313
130.40.320 Storage Facilities 314

130.40.330 Temporary Real Estate Sales Offices 315
130.40.340 *Reserved* 316
130.40.350 Timber Production Zone: Criteria, Regulations, and Zone Change Requirements 317
130.40.360 Transitional Housing 319
130.40.370 *Reserved* 320
130.40.380 Vehicle Maintenance, Repair, and Storage Accessory to a Residential Use 320
130.40.390 Wind Energy Conversion Systems 320
130.40.400 Wineries 326
ARTICLE 5 – PLANNING PERMIT PROCESSING 339
Chapter 130.50 – Application Filing and Processing 341
130.50.010 Content 341
130.50.020 Organization of Review Process 341
130.50.030 Review Authority for Allowed Uses and Permit Decisions 341
130.50.040 General Review Procedures 343
Chapter 130.51 – General Application Procedures 345
130.51.010 Content 345
130.51.020 Application Forms, Submittal Process, and Fees 345
130.51.030 Environmental Review 347
130.51.040 Staff Report and Recommendations 347
130.51.050 Public Notice 348
130.51.060 Conditions of Approval 348
130.51.070 Conditions of Automatic Approvals 349
130.51.080 Post-Decision Notice 349
130.51.090 Pre-application/Conceptual Review 350
Chapter 130.52 – Permit Requirements, Procedures, Decisions, and Appeals 351
130.52.010 Administrative Permit, Relief, or Waiver 351
130.52.020 Minor Use Permits 353
130.52.021 Conditional Use Permits 353
130.52.030 Design Review Permit 354
130.52.040 Development Plan Permit 355
130.52.050 Temporary Mobile Home Permit 357

130.52.060 Temporary Use Permit 360
130.52.070 Variance 363
130.52.080 Requests for Reasonable Accommodation 364
130.52.090 Appeals. 367
Chapter 130.54 – Permit Implementation, Time Limits, and Extensions 369
130.54.010 Content 369
130.54.020 Effective Date of Permit Approvals 369
130.54.030 Applications Deemed Automatically Approved 369
130.54.040 Permits to Run with the Land 370
130.54.050 Performance Guarantees 370
130.54.060 Time Limits, Extensions, and Permit Expiration 371
130.54.070 Revision to an Approved Permit or Authorization 372
130.54.080 Resubmittals 373
130.54.090 Revocation or County Mandated Modification of a Permit 374
Chapter 130.56 – Specific Plans 377
130.56.010 Content 377
130.56.020 Approval Authority 377
130.56.030 Findings Required 377
130.56.040 Contents of Specific Plan 378
130.56.050 Conformance to Specific Plan Required 378
130.56.060 Amendments 378
Chapter 130.58 – Development Agreements 379
130.58.010 Content; Assurances to Applicant 379
130.58.020 Limitation 379
130.58.030 Review Authority 379
130.58.040 Findings Required 380
130.58.050 Form of Agreement 380
130.58.060 Amendment, Cancellation, or Assignment 381
130.58.070 Recordation 381
130.58.080 Periodic Review 381
130.58.090 Rules, Regulations, and Official Policies 382
ARTICLE 6 – ZONING ORDINANCE ADMINISTRATION 383
Chapter 130.60 – Administrative Responsibilities 385

130.60.010 Planning Agency Established; Functions Defined 385
130.60.020 Director and Department 386
130.60.030 Zoning Administrator 386
130.60.040 Planning Commission 387
130.60.050 Board of Supervisors 387
130.60.060 Technical Advisory Committee 387
130.60.070 Design Review Committee 388
130.60.080 Floodplain Administrator 389
Chapter 130.61 – Nonconforming Uses, Structures, and Lots 391
130.61.010 Content; Applicability 391
130.61.020 Continuation, Transfer, or Sale 391
130.61.030 Legal Nonconforming Structures 391
130.61.040 Legal Nonconforming Uses 392
130.61.050 Changes or Expansion of Legal Nonconforming Uses 393
130.61.060 Legal Nonconforming Lots 394
130.61.070 Structures and Uses Under Construction 394
130.61.080 Determination of Abandonment – Nonconforming Use 395
130.61.090 Appeal of Determination of Abandoned Nonconforming Uses 395
130.61.100 Restoration of Abandoned Nonconforming Uses 395
130.61.110 Public or Private Nuisance 396
Chapter 130.63 – Amendments and Zone Changes 397
130.63.010 Content 397
130.63.020 Ordinance Amendments and Zone Change Applications 397
130.63.030 General Plan and Specific Plan Amendments 398
Chapter 130.65 – Covenant of Easement 399
130.65.010 Applicability 399
130.65.020 Form of Covenant 399
130.65.030 Effect of the Covenant 399
130.65.040 Release of Covenant 400
130.65.050 Enforceability 400
Chapter 130.67 – Code Enforcement 401
130.67.010 Content 401
130.67.020 Conformance by County Officials 401

130.67.030 Administration and Enforcement 401
130.67.040 Abatement of Nuisance and Penalty for Violation 401
130.67.050 Subsequent Permits 402
130.67.060 Remedies Cumulative 402
130.67.070 Investigation Fee 402
Chapter 130.68 – Post-Disaster Rebuilding 403
130.68.010 Content 403
130.68.020 Exceptions 403
130.68.030 Applicability 403
130.68.040 General Provisions 403
130.68.050 Modifications of the Provisions of this Title 404
130.68.060 CEQA Exemption 405
130.68.070 Appeals 405
ARTICLE 7 – FEES 407
Chapter 130.70 – Bass Lake Hills Specific Plan Supplemental Tentative Map Submittal (BLHSP STMS) Fee 409
130.70.010 Title, Purpose, and Intent 409
130.70.020 Definitions 409
130.70.030 Findings of the Board 410
130.70.040 Fee Requirement 411
130.70.050 Amount of Fee 411
130.70.060 Time of Payment and Refunds 411
130.70.070 Uses of Fee Revenue 411
130.70.080 Creation of Fee Account 411
130.70.090 Fee Exemptions 411
Chapter 130.71 – Ecological Preserve Fee 413
130.71.010 Purpose 413
130.71.020 Applicability 413
130.71.030 Definitions 413
130.71.040 Ecological Preserve Mitigation and Fee in Lieu of Mitigation 414
130.71.050 On-Site Mitigation in Mitigation Area 0 414
130.71.060 Off-site Mitigation or Fee Payment in Lieu of Ecological Preserve Mitigation in Mitigation Areas 1 and 2 415

130.71.070 Ecological Preserve Fee; Formula 415
130.71.080 Annual Fee Review 415
130.71.090 Time of Fee Payment 415
130.71.100 Exemption or Credits 415
130.71.110 Accounting 416
130.71.120 Handling 416
130.71.130 Appeals 416
130.71.140 Termination of Mitigation Requirement or Fee in Lieu of Mitigation 416
Chapter 130.72 – Missouri Flat Planning Cost Reimbursement Fee 417
130.72.010 Title, Purpose, and Intent 417
130.72.020 Definitions 417
130.72.030 Findings of the Board 418
130.72.040 Fee Requirement 419
130.72.050 Amount of Fee 419
130.72.060 Time of Payment; Refunds 419
130.72.070 Uses of Fee Revenue 420
130.72.080 Creation of Fee Account 420
130.72.090 Fee Credits 420
130.72.100 Fee Exemptions 420
130.72.110 Separability 420
ARTICLE 8 – GLOSSARY 421
Chapter 130.80 – Glossary 422
130.80.010 Contents 422
130.80.020 Definitions of Specialized Terms and Phrases 422

ARTICLE 1 – ZONING ORDINANCE APPLICABILITY

CHAPTER 130.10 – ENACTMENT AND APPLICABILITY OF THE ZONING ORDINANCE

Sections:

130.10.010	Title and Enactment of Zoning Ordinance
130.10.020	Authority, Relationship to General Plan
130.10.030	Responsibility for Administration
130.10.040	Applicability of Zoning Ordinance
130.10.050	Rules of Interpretation
130.10.060	Severability
130.10.070	Indemnification and Hold Harmless Agreement

CHAPTER 130.12 – ZONING MAPS

Sections:

130.12.010	Zones Established
130.12.020	Zoning Map and Zones

THIS PAGE INTENTIONALLY LEFT BLANK

CHAPTER 130.10 – ENACTMENT AND APPLICABILITY OF THE ZONING ORDINANCE

Sections:

130.10.010	Title and Enactment of Zoning Ordinance
130.10.020	Authority, Relationship to General Plan
130.10.030	Responsibility for Administration
130.10.040	Applicability of Zoning Ordinance
130.10.050	Rules of Interpretation
130.10.060	Severability
130.10.070	Indemnification and Hold Harmless Agreement

130.10.010 Title

This Title shall be known, and cited, and referred to as, the El Dorado County Zoning Ordinance or "Ordinance." The Zoning Ordinance constitutes a portion of the County Code of Ordinances.

Enactment of Zoning Ordinance

This Zoning Ordinance is enacted to implement the El Dorado County General Plan by classifying and regulating the uses of land and structures within unincorporated El Dorado County and is adopted to protect and promote the public health, safety, and general welfare of the County.

130.10.020 Authority, Relationship to General Plan

A. This Title is adopted based on the authority vested in El Dorado County by the State of California, including but not limited to the *State Constitution, Section 65800 et seq. of the California Government Code*, the *California Environmental Quality Act*, the *Subdivision Map Act*, *Housing Act*, *Surface Mining and Reclamation Act*, and applicable provisions of the *Health and Safety Code*.

B. This Title is hereby adopted and shall be maintained so as to be consistent with the El Dorado County General Plan. Any land use or development approved according to the requirements of this Title shall be consistent with the General Plan and any applicable specific plan.

C. Within the Lake Tahoe Basin, as delineated on Figure LU-1 (Land Use Diagram) of the General Plan, all land use and development approvals shall also be subject to requirements of the Lake Tahoe Regional Plan and the County Code of Ordinances.

D. Where an inconsistency is discovered between the General Plan and the zoning designation for a lot, the General Plan designation shall govern and the inconsistency is hereby recognized to constitute a mapping error. It shall be the responsibility of the County to correct any such mapping error within 180 days from the date the inconsistency is discovered. The correction of a mapping error shall be exempt from the County's customary application and processing fees. To ensure timely resolution of mapping errors, the County shall schedule hearings for amendments to the Zoning Ordinance at least quarterly.

130.10.030 Responsibility for Administration

A. **Responsible Bodies and Individuals.** This Title shall be administered by:

1. The El Dorado County Board of Supervisors, hereafter referred to as the Board;

2. The Planning Commission, hereafter referred to as the Commission;

3. The County Zoning Administrator, hereafter referred to as the Zoning Administrator;

4. The County Agricultural Commission, hereafter referred to as the Ag Commission;

5. The Director of the Planning and Building Department or designee, hereafter referred to as the Director; and

6. The Planning and Building Department hereafter referred to as the Department.

B. **Advisory Committees.** The Board may appoint Advisory Committees to review design review applications, or provide input on other issues of concern to the Board or the Commission. These Advisory Committees include, but are not necessarily limited to, the following:

1. Cameron Park Design Review Committee

2. El Dorado Hills Design Review Committee

3. Pollock Pines Design Review Committee

4. Community & Economic Development Advisory Committee ("CEDAC")

5. Diamond Springs-El Dorado Community Advisory Committee

6. Meyers Area Plan Advisory Committee

C. **Responsibility and Authority of the Director.** The duties and responsibilities of the Director are those enumerated in Article 6 (Zoning Ordinance Administration) of this Title, in this Title and in other Titles of the County Code of Ordinances. Whenever this Title refers to the Director, it is expressly understood to include Department staff acting under the direction and control of the Director, and whenever this Title refers to the Department it is expressly understood to describe Department staff acting under the direction and control of the Director.

D. **Rules of Application.** This Title shall be applied in the following manner:

1. **Minimum Requirements.** The provisions of this Title shall be deemed to be the minimum standards unless stated otherwise (for example, maximum building height or maximum density). These standards shall apply to all buildings, structures and uses, except where this Title provides for the exercise of discretion or where a Variance is granted.

2. **Conflicting Provisions**. If conflicts occur between different requirements of this Title, or between provisions of this Title and requirements imposed by other provisions of the County Code of Ordinances or other laws, and regulations adopted by the County, the more stringent development requirement or greater restriction on the use of land or buildings shall apply.

3. **Single Lot Containing Multiple Zones.** Where the boundaries of the zone designation are not coterminous with the property line boundaries, a single lot will contain multiple zones. In that event, the County shall first determine if the zone boundary appears to be the result of a mapping error. In that case, the mapping error shall be resolved as provided in Subsection D.5 (Map Corrections) below in this Section.

   Where the County determines that a mapping error has not occurred, the uses of the lot shall be consistent with the zone as shown for the portion of the lot on which the use is proposed. Multiple uses of a lot with multiple zones are expressly allowed consistent with the requirements of each zone. The precise location of the uses may be modified by a planned development or specific plan. Any uncertainty as to the boundaries of each zone within the lot shall be determined pursuant to Subsection D.4 (Map Boundaries) below in this Section.

4. **Map Boundaries.** Where the boundaries of any zone shown on the zoning maps are uncertain, the following rules shall apply to resolve the uncertainty:

   a. Where a zone boundary approximately follows a lot line, or road or street, such lot line or the centerline of the road or street shall be construed to be the boundary.

b. Where a zone boundary approximately follows a stream or river, ridge line or other distinct geographic or topographic feature, such stream or geographic feature shall be construed to be the boundary.

c. If a zone divides a lot, and the boundary line location is not otherwise designated, the location of the boundary shall be determined by the use of the scale appearing on the zoning map.

5. **Map Corrections.** Where a zone boundary appears to be in error, the Director may make the correction based on historical data, prior zoning maps, clear legislative intent, and other available information. Where the record is unclear, the zoning shall be reviewed by the Commission to determine if the map is in error. If, after review of the record, the Commission finds that the map is in error, they shall direct the Director to correct said error by revising the official maps accordingly within 30 days of the Commission's review.

130.10.040 Applicability of Zoning Ordinance

A. **Area of Applicability.** The provisions of this Title shall apply to all lands within the unincorporated area of the County of El Dorado except as provided in Subsection B (Exemptions from Zone Ordinance Requirements) below in this Section.

B. **Exemptions from Zone Ordinance Requirements.** The provisions of this Title do not apply to the following activities, uses, and structures, except where provisions of a memorandum of understanding between the County and another governmental agency provide for County regulatory authority or otherwise provided by law:

1. Activities of the Federal Government on federally owned or leased land.

2. Activities of the State of California or any agency of the state on state owned or leased land.

3. Activities of a local agency, as defined in California Government Code Section 53090, as provided in Section 53091 et seq.

4. The location and construction of facilities for water and electrical energy as provided in California Government Code Section 53091.

5. Tribal lands which are not subject to the jurisdiction of the County.

6. Existing and future preemptions of local land use authority resulting from State Law.

C. **Effect of Zoning Ordinance Changes on Projects in Progress.** The enactment of this Title or amendments hereto may have the effect of imposing different standards on development or new uses from that which previously applied. Following the effective date of this Title the following provisions shall apply:

1. **Pending Applications.** Applications which have been determined by the Department to be complete and in compliance with California Government Code Section 65943 before the effective date of this Title, or any amendment hereto, shall comply with the provisions of this Title in effect on the date that the application is deemed complete.

2. **Approved Applications.** Applications approved prior to the effective date of this Title, or any amendment hereto, may be constructed or used in accordance with the conditions of approval therefore; provided, however, approval of any extension shall be governed by the provisions of Subsection C.3 (Time Extensions) below in this Section.

3. **Time Extensions.** An approval of an extension of time for an approved application may be conditioned to comply with the provisions of this Title in effect when the application for time extension is deemed complete in compliance with California Government Code Section 65943 where necessary to comply with state and federal law or to protect public health and safety. Provisions regarding processing of time extensions are found in Chapter 120.74 (Expiration of Approved Maps) of the County Code of Ordinances.

4. **Subdivisions.** Except as provided in Title 120 (Subdivisions), Chapter 120.68 (Vesting Tentative Maps) of the County Code of Ordinances and California Government Code Section 66498.1, the provisions of this Subsection shall apply only to the creation of lots authorized by an approved tentative map or tentative parcel map deemed complete prior to the effective date of this Title. Subsequent development of lots shall meet the provisions of this Title in effect at the time that such subsequent development occurs unless provisions of a planned development or other application under Subsections C.1 (Pending Applications) and C.2 (Approved Applications) above in this Section, apply.

D. **Exception for Area Covered by Specific Plan.** Where a specific plan has been adopted for an area in compliance with Chapter 130.56 (Specific Plans) in Article 5 (Planning Permit Processing) of this Title and California Government Code Section 65450 et seq., the zones, development standards, and other provisions of the specific plan and any implementing ordinance adopted in compliance with that plan shall

supersede the provisions of this Title. In the event that a specific plan implementing ordinance does not address an issue, the provisions of this Title shall apply.

E. **Private Agreements.** The Zoning Ordinance is not intended to interfere with, repeal, abrogate, or annul any easement; covenant; deed restriction; Covenants, Conditions, and Restrictions (CC&Rs); or other agreement between private parties. Where conflict occurs between the Zoning Ordinance and a private agreement, the County shall apply the Zoning Ordinance. The County shall not be responsible for monitoring or enforcing private agreements.

130.10.050 Rules of Interpretation

The Director shall have the authority to issue administrative interpretation of the provision of this Title to resolve ambiguities.

A. **Record of Interpretations.** Whenever the Director determines that the applicability or the meaning of any of the provisions of the Title is ambiguous, the Director may issue an official interpretation. Official interpretations shall be in writing, and cite the provision being interpreted, together with an explanation of its meaning or application in the particular or general circumstances that caused the need for interpretation. Where the Director finds that no clear interpretation can be made, the matter may be referred to the Commission. The Commission shall hold a public hearing prior to making an interpretation. Notice of such hearing shall be provided by listing the matter on the Commission agenda and posting notice at least 72 hours prior to the hearing. A record of all official interpretations shall be maintained and available for public review both at the Department offices and posted on the Department web site, indexed by the section number of this Title that is the subject of the interpretation. Interpretations of the Director or Commission shall be incorporated into the official text of the Ordinance within 12 months of the Director or Commission determination through the County text amendment process.

B. **Appeal of Interpretations.** Interpretations by the Director, Zoning Administrator or Commission may be appealed in accordance with Section 130.52.090 (Appeals) in Article 5 (Planning Permit Processing) of this Title. Until such time as the interpretations are incorporated into the official text of the Ordinance, interpretations are only advisory to the Board.

130.10.060 Severability

If any provision of this Title is for any reason held to be invalid, unconstitutional, or unenforceable by a court of competent jurisdiction, the decision shall not affect the validity of the remaining portions of this Title. The Board hereby declares that it would have adopted this Title and each provision thereof, irrespective of the fact that any one or more portions of this Title may be declared invalid, unconstitutional, or unenforceable.

130.10.070 Indemnification and Hold Harmless Agreement

A. **Applicant's Agreement to Indemnify and Hold Harmless.** As a condition of approval of a land use application, the applicant shall agree to defend, indemnify, and hold harmless the County or its agents, officers, and employees from any claim, action, or proceeding against the County or its agents, officers, or employees to attack, set aside, void, or annul an approval of the County, an advisory agency, appeal board or legislative body concerning the map or permit or any other action relating to or arising out of County approval.

B. **County's Duty to Notify Applicant and Cooperate in Defense.** Any condition of approval imposed in compliance with this Title shall include a requirement that the County act reasonably to promptly notify the applicant of any claim, action, or proceeding and that the County cooperate fully in the defense.

THIS PAGE INTENTIONALLY LEFT BLANK

CHAPTER 130.12 – ZONING MAPS

Sections:

130.12.010 Zones Established
130.12.020 Zoning Map and Zones

130.12.010 Zones Established

This Section identifies the official zones that are established and shown on the zoning maps created in compliance with Section 130.12.020 (Zoning Map and Zones) below in this Chapter.

A. **Official Zones.**

1. **Residential**

Residential, Multi-unit (RM)
Residential, Single-unit (R)
Residential, One-acre (R1A)
Residential, Two-acre (R2A)
Residential, Three-acre (R3A)
Residential, Estate (RE)

2. **Agricultural, Rural, and Resource**

Limited Agricultural (LA)
Planned Agricultural (PA)
Agricultural Grazing (AG)
Timber Production (TPZ)
Forest Resource (FR)
Rural Lands (RL)

3. **Commercial**

Commercial, Professional Office (CPO)
Commercial, Limited (CL)
Commercial, Main Street (CM)
Commercial, Community (CC)
Commercial, Regional (CR)
Commercial, General (CG)
Commercial, Rural (CRU)

4. **Industrial**
   Industrial, Light (IL)
   Industrial, Heavy (IH)
   Research and Development (R&D)

5. **Special Purpose**

   Recreational Facilities, Low-Intensity (RF-L)
   Recreational Facilities, High-Intensity (RF-H)
   Open Space (OS)
   Transportation Corridor (TC)

6. **Codified Area Plan**

   Meyers Area Plan (MAP)

B. **Minimum Lot Size Designation.** A designator indicating the minimum lot size shall be applied to all R, RE, PA, LA, RL, FR, and AG zones.

1. For R zones the numeric designator shall represent minimum lot sizes of 6,000 and 20,000 square feet, expressed as "R1" for 6,000 square feet and "R20K" for 20,000 square feet.

2. For RE zones the numeric designator shall represent the minimum lot size expressed in acres. The designator shall be one of the following: -5 and -10.

3. For PA, LA and RL zones the numeric designator shall represent the minimum lot size expressed in acres. The designator shall be one of the following: -10, -20, -40, -80, and -160.

4. For FR zones the numeric designator shall represent the minimum lot size expressed in acres. The designator shall be one of the following: -40, -80, and -160.

5. For AG zones the numeric designator shall represent the minimum lot size expressed in acres. The designator shall be one of the following: -40, -80, and -160.

C. **Meyers Area Plan Zones.** To implement the Meyers Area Plan, each of the five subareas shall be designated on the official zoning map as MAP-1, MAP-2, MAP-3, MAP-4, and MAP-5 to reflect the subareas and the variables that each area represents in compliance with Chapter 130.26 (Meyers Area Plan (MAP) Zone) in Article 2 (Zones, Allowed Uses, and Zoning Standards) of this Title.

D. **Combining Zones.** In addition to the primary zones established by Subsection A (Official Zones) above in this Section, the following combining zones are established:

1. Airport Safety (-AA)
2. Avalanche (-AV)
3. Dam Failure Inundation (-DFI)
4. Design Review-Community (-DC)
5. Design Review-Historic (-DH)
6. Design Review-Scenic Corridor (-DS)
7. Manufactured/Mobile Home Park (-MP)
8. Mineral Resource (-MR)
9. Noise Contour (-NC)
10. Planned Development (-PD)
11. Tahoe Basin (-T)

130.12.020 Zoning Map and Zones

The boundaries of the zones established by Section 130.12.010 (Zones Established) above in this Chapter shall be shown on the maps designated as the "County of El Dorado Zoning Maps," hereinafter referred to as Zoning Map. The Zoning Map shall be adopted by the Board in compliance with applicable law, and is hereby incorporated into this Title by reference as though it were fully set forth herein (see Exhibit A – Zoning Map). Any changes to the Zoning Map shall be accomplished as set forth in Chapter 130.63 (Amendments and Zone Changes) in Article 6 (Zoning Ordinance Administration) of this Title.

EXHIBIT A – ZONING MAP

(See Next Page)

ARTICLE 2 – ZONES, ALLOWED USES, AND ZONING STANDARDS

CHAPTER 130.20 – DEVELOPMENT AND USE APPROVAL REQUIREMENTS

130.20.010 Contents of Chapter
130.20.020 General Requirements for Development and New Uses
130.20.030 Allowable Use and Planning Permit Requirements
130.20.040 Exemptions from Planning Permit Requirements
130.20.050 Temporary Uses

CHAPTER 130.21 – AGRICULTURAL, RURAL, AND RESOURCES ZONES

130.21.010 Zones Established; Applicability
130.21.020 Matrix of Allowed Uses
130.21.030 Agricultural, Rural, and Resource Zone Development Standards

CHAPTER 130.22 – COMMERCIAL ZONES

130.22.010 Zones Established; Applicability
130.22.020 Matrix of Allowed Uses
130.22.030 Commercial Zone Development Standards

CHAPTER 130.23 – INDUSTRIAL AND RESEARCH AND DEVELOPMENT ZONES

130.23.010 Zones Established; Applicability
130.23.020 Matrix of Allowed Uses
130.23.030 Development Standards
130.23.040 Design Standards

CHAPTER 130.24 – RESIDENTIAL ZONES

130.24.010 Zones Established; Applicability
130.24.020 Matrix of Allowed Uses
130.24.030 Residential Zone Development Standards

CHAPTER 130.25 – SPECIAL PURPOSE ZONES

130.25.010 Zones Established; Applicability
130.25.020 Matrix of Allowed Uses
130.25.030 Special Purpose Zone Development Standards

CHAPTER 130.26 – MEYERS AREA PLAN (MAP) ZONE

130.26.010 Zone Established
130.26.020 Applicability
130.26.030 Zone Designations
130.26.040 Uses Allowed by Right or by Conditional Use Permit
130.26.050 Matrix of Allowed Uses
130.26.060 Development Standards

CHAPTER 130.27 – COMBINING ZONES

130.27.010 Combining Zones Established; Applicability
130.27.020 *Reserved*
130.27.030 Avalanche Hazard (-AV) - *Reserved*
130.27.040 Dam Failure Inundation (-DFI)
130.27.050 Design Review-Community (-DC)
130.27.060 Design Review-Historic (-DH)
130.27.070 Design Review-Scenic Corridor (-DS)
130.27.080 *Reserved*
130.27.090 Mobile/Manufactured Home Parks (-MP)
130.27.100 Airport Noise and Safety Contour (-ANS)
130.27.110 *Reserved*
130.27.120 Tahoe Basin (-T)

CHAPTER 130.28 – PLANNED DEVELOPMENT (-PD) COMBINING ZONE

130.28.010 Planned Development Combining Zone Established
130.28.020 Applicability
130.28.030 Combination with Other Zones
130.28.040 Zone Change and Development Plan Requirements
130.28.050 Residential Development Requirements
130.28.060 Residential Density Bonuses for On-site Open Space
130.28.070 Condominium Conversions

CHAPTER 130.29 – MINERAL RESOURCE (-MR) COMBINING ZONE, EXPLORATION, MINING, RECLAMATION, AND PROTECTION

130.29.010 Mineral Resource (–MR) Combining Zone Established
130.29.020 Definitions
130.29.030 Applicability
130.29.040 Exemptions
130.29.050 General Requirements
130.29.080 Measure A Initiative Ordinance
130.29.090 Mining and Reclamation
130.29.100 Standards for Reclamation
130.29.110 Interim Management Plans
130.29.120 Annual Report Requirement

CHAPTER 1-30.20 – DEVELOPMENT AND USE APPROVAL REQUIREMENTS

Sections:

130.20.010 Contents of Chapter
130.20.020 General Requirements for Development and New Uses
130.20.030 Allowable Uses and Planning Permit Requirements
130.20.040 Exemptions from Planning Permit Requirements
130.20.050 Temporary Uses

130.20.010 Contents of Chapter

This Chapter contains the County's requirements for the approval of proposed development and new uses. Development Standards and permit requirements established by this Ordinance for specific uses are in Chapters 130.21 (Agricultural, Rural Lands, and Resources Zones) through 130.26 (Meyers Area Plan [MAP] Zone).

130.20.020 General Requirements for Development and New Uses

Each use and/or structure shall be established, constructed, reconstructed, altered, moved or replaced in compliance with the following requirements.

A. **Allowable Use.** Only a use allowed by this Ordinance in the zone applied to the site shall be established. The basis for determining whether a use is allowable is described in Section 130.20.030 (Allowable Uses and Planning Permit Requirements) below in this Chapter.

B. **Permit and Approval Requirements.** Any planning permit or other approval required by Section 130.20.030 (Allowable Uses and Planning Permit Requirements) below in this Chapter shall be obtained before the issuance of any required grading, building, or other construction permit, and before the proposed use is constructed, otherwise established or put into operation, unless the proposed use is listed in Section 130.20.040 (Exemptions from Planning Permit Requirements) below in this Chapter.

C. **Development Standards, Conditions of Approval.** Each use and structure shall comply with the development standards of this Chapter, applicable standards and requirements in Article 3 (Site Planning and Project Design Standards) and Article 4 (Specific Use Regulations) of this Title, applicable site or design requirements identified in other Board adopted manuals, and/or any applicable conditions imposed by a previously granted planning permit.

D. **Legal Lot.** The site of a proposed development or new use shall be on a legal lot, as defined in Article 8 (Glossary: See "Legal Lot") of this Title.

130.20.030 Allowable Uses and Planning Permit Requirements

A. **Allowable Uses.** The uses allowed by this Ordinance are listed in Chapters 130.21 (Agricultural, Rural, and Resources Zones) through 130.25 (Special Purpose Zones) below in this Article, together with the type of planning permit required for each use. Each use type listed in the tables is defined in Article 8 (Glossary) of this Title unless otherwise defined within Article 4 (Specific Use Regulations). Chapter 130.26 (Meyers Area Plan [MAP] Zone) below in this Article regarding the Meyers Area Plan has different use type provisions and definitions as set forth in the Tahoe Regional Planning Agency (TRPA) Code of Regulations.

1. **Establishment of an Allowable Use.**

   a. Any use type identified by Chapters 130.21 (Agricultural, Rural, and Resources Zones) through 130.26 (Meyers Area Plan [MAP] Zone) below in this Article as being allowable within a specific zone may be established on any lot within that zone, subject to the planning permit requirements of Subsection B (Planning Permit Requirements) below in this Section, and compliance with all applicable requirements of this Ordinance.

   b. Where a single lot is proposed for concurrent development of two or more uses listed in the tables, the overall project shall be subject to the permit level required for each individual use under Subsection B (Planning Permit Requirements) below in this Section. Consolidation of multiple permits into the one permit application may be allowed, subject to Director approval.

2. **Use Not Listed.**

   a. A use that is not listed in Chapters 130.21 (Agricultural, Rural, and Resources Zones) through 130.26 (Meyers Area Plan [MAP] Zone) below in this Article, and is determined by the Director to not be included in Article 8 (Glossary) of this Title under the definition of a listed use, is not allowed within the County, except as otherwise provided in Subsection A.3 below in this Section, or Section 130.20.040 (Exemptions from Planning Permit Requirements) below in this Chapter.

   b. A use that is not listed in the tables within a particular zone is not allowed within that zone, except as otherwise provided in Subsection A.3 (Similar and Compatible Uses Allowed) below in this Section, or Section 130.20.040 (Exemptions from Planning Permit Requirements) below in this Chapter.

3. **Similar and Compatible Uses Allowed.** A use not listed in this Article is allowable where the Director or other approval authority makes the following findings:

   a. **Required Findings; Similar and Compatible Use.** A proposed use not listed in this Article is similar to and compatible with a listed use and shall be allowed where the Director or other approval authority makes all of the following findings:
      (1) The characteristics of, and activities associated with the use are similar to one or more of the listed uses, and will not involve a greater intensity than the uses listed in the zone;
      (2) The use will be consistent with the purposes of the applicable zone;
      (3) The use will be consistent with the General Plan and any applicable specific plan; and
      (4) The use will be compatible with the other uses allowed in the zone.

      A determination that a use qualifies as a similar and compatible use and the findings supporting the determination shall be in writing. The Zoning Ordinance shall be periodically amended to incorporate those uses not listed in this Article which are found to be similar and compatible.

   b. **Applicable Standards and Permit Requirements.** When the Director determines that a proposed but unlisted use is similar and compatible to a listed use, the proposed use will be treated in the same manner as the listed use in determining where it is allowed, what permits are required, and what other standards and requirements of this Ordinance apply.

   c. **Referral for Determination.** The Director may refer the question of whether a proposed use qualifies as a similar and compatible use directly to the Commission for a determination at a public meeting.

   d. **Appeal.** A determination of similar and compatible use may be appealed in compliance with Section 130.52.090 (Appeals) in Article 5 (Planning Permit Processing) of this Title.

B. **Planning Permit Requirements.** Chapters 130.21 (Agricultural, Rural, and Resources Zones) through 130.25 (Special Purpose Zones) below in this Article provide for uses that are:

   1. Allowed by right subject to compliance with all applicable provisions of this Ordinance. Uses allowed by right are exempt from planning permit

requirements. These are shown as "P" in each respective matrix of allowed uses;

2. Allowed subject to approval of an Administrative Permit (Section 130.52.010, Administrative Permit, Relief, or Waiver) in Article 5 (Planning Permit Processing) of this Title, shown as “A” in each respective matrix of allowed uses;

3. Allowed subject to approval of a Temporary Use Permit (Section 130.52.060, Temporary Use Permit) in Article 5 (Planning Permit Processing) of this Title, shown as “TUP” in each respective matrix of allowed uses;
4. Allowed subject to the approval of a Use Permit (Section 130.52.021, Conditional and Minor Use Permits) in Article 5 (Planning Permit Processing) of this Title, and shown as "CUP" or “MUP” in each respective matrix of allowed uses;

5. Not allowed in particular zones, shown as "—" in each respective matrix of allowed uses;

6. Where additional provisions are contained in Article 4 (Specific Use Regulations) of this Title that address the “by right” or permit requirements, the matrix will cross reference the applicable section.

C. **Meyers Area Plan Requirements.** Chapter 130.26 (Meyers Area Plan [MAP] Zone) below in this Article provides for uses within the Meyers Area Plan and follows the unique permit requirements of Section 130.26.050 (Matrix of Allowed Uses) below in this Article instead of Subsection 130.20.030.B (Planning Permit Requirements) above in this Section.

D. **Multiple Permits May Be Required.** A use authorized through the approval of an Administrative Permit, Temporary Use Permit, or Conditional/Minor Use Permit may also require a Design Review Permit, building permit, and/or other permit(s) as required by the County Code of Ordinances.

130.20.040 Exemptions from Planning Permit Requirements

A. **General Requirements for Exemption.** The uses, structures, and activities identified by Subsection B below in this Section are allowed in any zone and are exempt from the planning permit requirements of this Ordinance when:

1. The use, activity or structure is established and operated in compliance with the setback requirements, height limits, and all other applicable standards of this Article 2 (Zones, Allowed Uses, and Zoning Standards), and Article 3 (Site Planning and Project Design Standards), Article 4 (Specific Use Regulations) and, where applicable, Chapter 130.61 (Nonconforming Uses,

Structures, and Lots) in Article 6 (Zoning Ordinance Administration) of this Title; and

2. Any permit or approval required by regulations other than this Ordinance is obtained (for example, a Building Permit).

B. **Exempt Activities and Uses.** The following are exempt from the planning permit requirements of this Ordinance when in compliance with Subsection A (General Requirements for Exemption) above in this Section.

1. **Allowed Uses.** Uses identified in Chapters 130.21 (Agricultural, Rural, and Resources Zones) through 130.25 (Special Purpose Zones) below in this Article, inclusive, as allowed by right, shown as "P" in the matrices. Allowed Uses include Accessory Structures and Uses, as defined in Section 130.40.030 (Accessory Structures and Uses) in Article 4 (Specific Use Regulations) of this Title.

2. **Agricultural Buildings** exempt under County Building Code.

3. **Decks, Paths and Driveways.** Decks, platforms, on-site paths, and driveways. A building permit or grading permit may be required.

4. **Fences and Walls.** Except as set forth in Section 130.30.050 (Fences, Walls, and Retaining Walls in Article 3 (Site Planning and Project Design Standards) of this Title).

5. **Interior Remodeling.** Interior alterations that do not increase the gross floor area of the structure or change the Allowed use of the structure.

6. **Repairs and Maintenance.**

   a. **Single-unit Residential Dwellings.** Ordinary repairs to and maintenance of single-unit dwellings.

   b. **Multi-unit Residential Dwellings, and Non-residential Structures.** Ordinary repairs to, and maintenance of multi-unit residential and non-residential structures, if:
      (1) The work does not change the approved use of the site or structure; or add to, enlarge, or expand the use and/or structure; and
      (2) Any exterior repairs employ the same materials and design as the original construction.

7. **Small, Portable, Residential Accessory Structures.** A single portable structure per lot or unit, including pre-manufactured storage sheds or other small structures in residential zones that are exempt from building permit

requirements in compliance with the County Code of Ordinances and the building code. Additional structures may be approved in compliance with Section 130.40.030 (Accessory Structures and Uses) in Article 4 (Specific Use Regulations) of this Title, where allowed by the applicable zone.

8. **Solar Collectors.** Solar collectors accessory to a building attached to the roof or side of a building provided that the collectors comply with applicable height limit requirements.

9. **Spas, Hot Tubs, and Fish Ponds.** Portable spas, hot tubs, and constructed fish ponds, and similar equipment and structures that do not:

   a. Exceed 120 square feet in total area including equipment;

   b. Contain more than 2,000 gallons of water; or

   c. Exceed three feet in depth.

10. **Utilities.** The erection, construction, alteration, or maintenance by a public utility or public agency of utilities intended to service existing or nearby approved developments shall be allowed in any zone. These include: water; gas; electric; wastewater disposal systems; including wires, mains, drains, sewers, pipes, conduits, cables, fire-alarm boxes, police call boxes, traffic signals, hydrants, etc., but not including new transmission lines and related structures. Satellite and wireless communications antennas are not exempt, and are instead subject to Section 130.40.130 (Communication Facilities) in Article 4 (Specific Use Regulations) of this Title.

11. **Satellite Dish, Radio and Television Antennas.** Non-commercial, receive-only antennas for the sole use of the occupants of a structure provided that these antennas are not located within the front setback or street side setback on a corner lot:

   a. A ground or structure-mounted, radio or satellite dish antenna that does not project above the roof ridge line and does not have a diameter greater than one meter (39 inches); and

   b. Roof-mounted radio or television aerials not exceeding 75 feet in overall height (building height plus roof-mounted antenna height).

130.20.050 Temporary Uses

Requirements for establishing a temporary use (for example, a construction yard, seasonal sales lot, special event, temporary office trailer, etc.) are in Section 130.52.060 (Temporary Use Permit) in Article 5 (Planning Permit Processing) of this Title.

CHAPTER 130.21 – AGRICULTURAL, RURAL, AND RESOURCE ZONES

Sections:

130.21.010 Zones Established; Applicability
130.21.020 Matrix of Allowed Uses
130.21.030 Agricultural, Rural, and Resource Zone Development Standards

130.21.010 Zones Established; Applicability

A. A number of agricultural, rural and resource zones are established in this Ordinance to implement the uses described in the General Plan, and to provide for, promote and regulate the range of uses applicable to those lands.

B. This Chapter lists the uses allowed within an agricultural, rural land and a resource zone established by Section 130.12.010 (Zones Established) in Article 1 (Zoning Ordinance Applicability) of this Title, determines the type of planning permit/approval required for each use, and provides basic standards for site layout and building size.

C. The manner in which the individual agricultural, rural lands and resource zones are applied is as follows:

1. **Planned Agricultural (PA).** The PA, Planned Agricultural Zone, applies to the development of agricultural enterprises and uses whether encumbered by a farmland conservation contract or not. This zone shall be utilized to identify those lands most capable of supporting horticulture, aquaculture, ranching, and grazing, based on existing use, soil type, water availability, topography, and similar factors. Agricultural enterprise is intended to be the primary use of these lands, but compatible commercial uses, as listed in Table 130.21.020 (Agricultural, Rural, and Resource Zone Districts Use Matrix) below in this Chapter, may also be allowed in compliance with the provisions of this Chapter. Minimum lot size designators shall be applied to this zone based on commodity type, soil type, surrounding uses, and other appropriate factors. The designator shall represent the number of acres and shall be in the following increments: 10, 20, 40, 80, and 160.

2. **Limited Agricultural (LA).** The LA, Limited Agricultural Zone, applies to the development of agricultural enterprises and uses, whether encumbered by a farmland conservation contract or not. This zone shall be utilized to identify those lands most capable of supporting horticulture, aquaculture, ranching, and grazing, based on existing use, soil type, water availability, topography, and similar factors. The LA zone is distinguished from the PA zone in that it provides limited opportunities for ranch marketing and commercial winery uses, and shall generally be applied where those more intensive commercial

uses may be undesirable. Minimum lot size designators shall be applied to this zone based on commodity type, soil type, surrounding uses, and other appropriate factors. The designator shall represent the number of acres and shall be in the following increments: 10, 20, 40, 80, and 160.

3. **Agricultural Grazing (AG).** The AG, Agricultural Grazing Zone, is applied to lands suitable for grazing whether encumbered by a farmland conservation contract or not. This zone shall be utilized to identify those lands that are being used for grazing and/or that have the potential for commercially viable grazing operations, based on existing use, soil type, water availability, topography, and similar factors. Grazing and other agricultural activities are intended to be the primary use of these lands, but other compatible commercial uses may also be allowed in compliance with the provisions of this Chapter. Minimum lot size designators shall be applied to this zone based on use designation and other appropriate factors. The minimum lot size designator shall be in the following increments: 40, 80 and 160 acres.

4. **Timber Production (TPZ).** The TPZ, Timber Production Zone, is applied to identify and regulate lands subject to the Forest Taxation Reform Act of 1976 (California Government Code Section 51110, et seq.). Criteria for establishing a TPZ is located in Section 130.40.350 (Timber Production Zone: Criteria, Regulations, and Zone Change Requirements) in Article 4 (Specific Use Regulations) of this Title.

5. **Forest Resource (FR).** The FR, Forest Resource Zone, is applied to lands containing valuable timber or having the potential for timber production, but that are not subject to TPZ zoning requirements in compliance with Section 130.40.350 (Timber Production Zone: Criteria, Regulations, and Zone Change Requirements) in Article 4 (Specific Use Regulations) of this Title. The purpose of this zone is to encourage timber production and associated activities, and to limit noncompatible uses from restricting such activities. Minimum lot size designators shall be applied to this zone based on elevation and other appropriate factors. The minimum lot size designator shall be in the following increments: 40, 80, and 160 acres.

6. **Rural Lands (RL).** The RL, Rural Lands Zone, is intended to identify those lands that are suitable for limited residential development based on topography, access, groundwater or septic capability, and other infrastructural requirements. This zone may be applied where resource-based industries in the vicinity may impact residential uses. Commercial support activities that are compatible with the available infrastructure may be allowed within this zone to serve the surrounding rural and agricultural communities. Although agricultural uses are allowed, these lands generally do not support exclusive agricultural use. This zone is applied to those lands to allow uses which supplement the agricultural use. For special setback purposes, the RL zone is not considered to be an agricultural or timber zone. Minimum lot size

designators shall be applied to this zone based on the constraints of the site, surrounding uses, and other appropriate factors. The designator shall represent the minimum number of acres and shall be in the following increments: 10, 20, 40, 80, and 160.

130.21.020 Matrix of Allowed Uses

Uses are allowed in the following zones subject to the requirements of this Title as designated in Table 130.21.020 (Agricultural, Rural, and Resource Zone Districts Use Matrix) below in this Section:

Table 130.21.020 – Agricultural, Rural, and Resource Zone Districts Use Matrix

LA: Limited Agricultural **PA: Planned Agricultural** **AG: Agricultural Grazing** **RL: Rural Lands** **FR: Forest Resource** **TPZ: Timber Production Zone**	P Allowed use A Administrative permit required (130.52.010) TUP Temporary use permit required (130.52.060) CUP Conditional use permit required(130.52.021) MUP Minor use permit required (130.52.020) TMA Temporary mobile home permit (130.52.050) — Use not allowed in zone

USE TYPE	LA	PA	AG	RL	FR	TPZ	Specific Use Reg.
Agricultural							
Animal Raising and Keeping	P	P	P	P	P	P	130.40.080
Accessory Structures	P	P	P	P	P	P	130.40.030
Crop Production	P	P	P	P	P	—	
Dairy	P	P	P	P	P	—	
Grazing	P	P	P	P	P	P	
Livestock, high density	CUP	CUP	CUP	CUP	—	—	
Nursery, plants: Production and Wholesale	P	P	P	P	CUP	CUP	
Orchards and Vineyards	P	P	P	P	P	—	
Processing of agricultural products	P	P	P	CUP	CUP	CUP	
Produce Sales: Sale of produce grown on-site	P	P	P	P	P	—	130.40.240
Sale of produce grown off-site	A	A	A	A	A	—	
Timber	P	P	P	P[1]	P[1]	P[1]	
Agricultural Support Services							
Packing of on-site and off-site agricultural products	P	P	P	P	P	P	
Slaughterhouse or Rendering Plant	—	CUP	CUP	—	—	—	

Table 130.21.020 – Agricultural, Rural, and Resource Zone Districts Use Matrix

LA: Limited Agricultural **PA: Planned Agricultural** **AG: Agricultural Grazing** **RL: Rural Lands** **FR: Forest Resource** **TPZ: Timber Production Zone**	P Allowed use A Administrative permit required (130.52.010) TUP Temporary use permit required (130.52.060) CUP Conditional use permit required(130.52.021) MUP Minor use permit required (130.52.020) TMA Temporary mobile home permit (130.52.050) — Use not allowed in zone

USE TYPE	LA	PA	AG	RL	FR	TPZ	Specific Use Reg.
Agriculture, Value-added processing	P	P	P	P	P	—	
Custom Farm Services	CUP	CUP	CUP	CUP	CUP	—	
Animal, Domestic Farm: Sales	P	P	P	P	P	—	
Farm Machinery & Equipment Sales and Maintenance	CUP	CUP	CUP	CUP	CUP	—	
Feed and Farm Supply Store	CUP	CUP	CUP	CUP	CUP	—	
Nursery, Plant Production Plus	CUP	A	A	CUP	CUP	—	
Ranch Marketing	See Table 130.40.260.1 (Ranch Marketing Use Matrix)						130.40.260
Wholesale storage and distribution (Agricultural Products)	CUP	CUP	CUP	CUP	CUP	—	
Wineries	See Table 130.40.400.1 (Wineries Allowed Uses Matrix)						130.40.400
Residential							
Child Day Care Home: Small family day care home	P	P	P	P	P	—	130.40.110
Large family day care home	CUP	A	A	A	A	—	
Community Care Facility: Small (serving 6 or fewer)	—	—	—	P	—	—	
Large (serving 7 or more)	—	—	—	CUP	—	—	
Dwelling: Single-unit, detached	P	P	P	P	P	CUP	130.40.350
Temporary during construction	P	P	P	P	P	TUP	130.40.190
Employee Housing: Agricultural 6 or fewer employees	P	P	P	P	P	—	130.40.120
Agricultural up to 36 beds or 12 units in compliance with standards	MUP	MUP	MUP	MUP	MUP	—	130.40.120
Agricultural Not in compliance with standards	CUP	CUP	CUP	CUP	CUP	—	130.40.120
Construction	—	—	TUP	TUP	TUP	—	130.40.190
Seasonal Worker	—	—	A	A	A	—	130.40.120
Seasonal Workers not in compliance with standards	—	—	CUP	CUP	CUP	—	130.40.120

Table 130.21.020 – Agricultural, Rural, and Resource Zone Districts Use Matrix

LA: Limited Agricultural **PA: Planned Agricultural** **AG: Agricultural Grazing** **RL: Rural Lands** **FR: Forest Resource** **TPZ: Timber Production Zone**	P Allowed use A Administrative permit required (130.52.010) TUP Temporary use permit required (130.52.060) CUP Conditional use permit required(130.52.021) MUP Minor use permit required (130.52.020) TMA Temporary mobile home permit (130.52.050) — Use not allowed in zone						
USE TYPE	**LA**	**PA**	**AG**	**RL**	**FR**	**TPZ**	**Specific Use Reg.**
Guest House	P	P	P	P	P	—	130.40.150
Temporary Mobile Home	TMA	TMA	TMA	TMA	TMA	—	130.40.190
Kennel, private[2]	P	P	P	P	P	—	
Room Rental: One bedroom, only	P	P	P	P	P	—	
Secondary Dwelling	P	P	P	P	P	—	130.40.060, 130.40.300
Commercial							
Animal Sales and Service							
Kennel, commercial	CUP	CUP	CUP	CUP	CUP	—	
Pet Grooming and Pet Stores	CUP	CUP	CUP	CUP	CUP	—	
Veterinary Clinic	—	CUP	CUP	CUP	CUP	—	130.40.070
Breweries, Micro	CUP	CUP	CUP	CUP	CUP	—	
Contractor's Office	TUP	TUP	TUP	TUP	TUP	—	130.40.190
Commercial Kitchen	CUP[4]	CUP[4]	CUP	CUP	CUP	—	130.40.260 130.40.400
Dining Facilities	CUP	CUP	CUP	CUP	CUP	—	
Distillery	CUP	CUP	CUP	CUP	CUP	—	
Feed and Farm Supply Store	CUP	CUP	CUP	CUP	CUP	—	
Fuel Sales	—	—	—	—	CUP[5]	CUP[5]	
Home Occupation	See Table 130.40.160.1 (Home Occupation Use Matrix)					—	130.40.160
Lodging Facilities: Agricultural Lodging	See Table 130.40.170.1 (Agricultural Lodging)						130.40.170
Bed and Breakfast Inn	CUP	CUP	CUP	CUP	CUP	—	
Health Resort and Retreat Center	—	CUP	CUP	CUP	CUP	CUP	
Nursery, Plants: Commercial Retail	CUP	CUP	CUP	CUP	CUP	—	130.40.220

Table 130.21.020 – Agricultural, Rural, and Resource Zone Districts Use Matrix

LA: Limited Agricultural **PA: Planned Agricultural** **AG: Agricultural Grazing** **RL: Rural Lands** **FR: Forest Resource** **TPZ: Timber Production Zone**	P Allowed use A Administrative permit required (130.52.010) TUP Temporary use permit required (130.52.060) CUP Conditional use permit required(130.52.021) MUP Minor use permit required (130.52.020) TMA Temporary mobile home permit (130.52.050) — Use not allowed in zone

USE TYPE	LA	PA	AG	RL	FR	TPZ	Specific Use Reg.
Outdoor Retail Sales: Garage Sales	P	P	P	P	P	—	130.40.220
Temporary Outdoor	A/TUP	A/TUP	A/TUP	A/TUP	—	—	
Permanent	CUP	CUP	CUP	CUP	CUP	CUP	
Industrial							
Industrial: General	—	—	—	—	CUP	—	
Mineral Exploration, and Mining	See Table 130.29.070.1 (Mineral Exploration and Mining)						
Storage Yard: Equipment and Material Permanent	P	P	P	P	P	P	130.40.320.C
Temporary	TUP	TUP	TUP	TUP	TUP	TUP	
Recreation and Open Space							
Campground	CUP	CUP	CUP	CUP	CUP	CUP	130.40.100
Golf Course	—	—	—	CUP	—	—	
Hiking and Equestrian Trail	P	P	P	P	P	P	
Hunting/Fishing Club or Farm	A	P	P	P	P	P	130.40.210.D
Hunting/Fishing Club or Farm Facility	CUP	CUP	CUP	CUP	CUP	CUP	130.40.170.B
Marina: Non-motorized Craft	—	CUP	CUP	CUP	CUP	CUP	
Off-Highway or Off-Road Vehicle Recreation Area	—	—	—	—	CUP	—	
Park, day use	—	—	—	CUP	CUP	—	130.40.210
Picnic Area	P	P	P	P	P	P	
Resource Protection and Restoration	P	P	P	P	P	P	
Ski Area	—	—	—	CUP	CUP	—	130.40.210
Snow Play Area	—	—	—	CUP	CUP	CUP	
Special Events, temporary	TUP	TUP	TUP	TUP	TUP	TUP	
Stable: Commercial	CUP	CUP	CUP	CUP	CUP	CUP	130.40.210

Table 130.21.020 – Agricultural, Rural, and Resource Zone Districts Use Matrix

LA: Limited Agricultural **PA: Planned Agricultural** **AG: Agricultural Grazing** **RL: Rural Lands** **FR: Forest Resource** **TPZ: Timber Production Zone**	P Allowed use A Administrative permit required (130.52.010) TUP Temporary use permit required (130.52.060) CUP Conditional use permit required(130.52.021) MUP Minor use permit required (130.52.020) TMA Temporary mobile home permit (130.52.050) — Use not allowed in zone

USE TYPE	**LA**	**PA**	**AG**	**RL**	**FR**	**TPZ**	**Specific Use Reg.**
Trail Head Parking or Staging Area	CUP	CUP	CUP	CUP	CUP	CUP	130.40.210
Civic Uses							
Cemetery	—	—	CUP	CUP	CUP	—	
Churches and Community Assembly	—	—	—	CUP	CUP	—	
Community Services: Intensive	CUP	CUP	CUP	CUP	CUP	—	
Minor	CUP	CUP	CUP	CUP	CUP	—	
Schools: College and University	—	—	—	CUP	—	—	130.40.230
Elementary and Secondary, Private	—	—	—	CUP	—	—	
Transportation							
Airports, Airstrips, and Heliports	CUP	CUP	CUP	CUP	CUP	CUP	
Utility and Communication							
Communication Facilities	A / CUP	A / CUP	A / CUP	A / CUP	A / CUP	CUP	130.40.130
Public Utility Service Facilities: Minor	—	CUP	CUP	CUP	CUP	CUP	130.40.250
Minor	P	P	P	P	P	P	
Wind Energy Conversion System	See Table 130.40.390.1 (WECS Use Matrix)						130.40.390

NOTES:

[1] In FR and TPZ only, logging camps and sawmills may be allowed by CUP.

[2] Dogs used for herding or guardian purposes in commercial ranching or browsing operations are allowed by right subject to licensing requirements of the County Animal Services Division in compliance with Title 6 (Animals).

[3] **S**ubject to the issuance of an Administrative Permit, unless otherwise specified in Section 130.40.220 (Outdoor Retail Sales) in Article 4 (Specific Use Regulations) of this Title.

[4] Or as permitted in Section 130.40.400 (Wineries) or Section 130.40.260 (Ranch Marketing) in Article 4 (Specific Use Regulations) of this Title.

[5] Accessory to Off-highway or off road vehicle recreational uses.

130.21.030 Agricultural, Rural, and Resource Zone Development Standards

Allowed uses and associated structures shall comply with the following development standards listed in Table 130.21.030 (Agricultural, Rural, and Resource Zones Development Standards) below in this Section in addition to any other applicable requirements of this Title, unless a variance is obtained in compliance with Section 130.52.070 (Variance) in Article 5 (Planning Permit Processing) of this Title, or standards are modified pursuant to a Development Plan permit in compliance with Section 130.52.040 (Development Plan Permit), in Article 5 (Planning Permit Processing) of this Title.

Table 130.21.030 – Agricultural, Rural, and Resource Zones Development Standards

Development Attribute	LA	PA	AG	TPZ	FR	RL
Minimum Lot Size[1, 2]	10 acres or as designated	10 acres or as designated	40 acres or as designated	160 acres	40 acres below 3,000 ft. elev. or as designated; 160 acres 3,000 ft. and higher	10 acres or as designated
Setbacks: (in feet) Agricultural (ag) structure, Front, secondary front, sides, rear	50	50	50	50	50	50
Non–ag structure, Front, secondary front, sides, rear	30	30	30	30	30	30
Building Height: (in feet) Ag structure	50	50	50	50	50	50
Non-ag structure	45	45	45	45	45	45
Lot Frontage (in feet)	200	150	200	200	200	150

Notes:

[1] An agricultural preserve may consist of a lot or adjacent lots of between 10 and 20 acres in compliance with Section 130.40.060 (Agricultural Preserves and Zones: Contracts, Criteria, and Regulations) in Article 4 (Specific Use Regulations) of this Title.

[2] Lots that are created for access road, parking areas, common area landscaping and open space purposes are exempt from the area and frontage standards of the respective zones.

CHAPTER 130.22 – COMMERCIAL ZONES

Sections:

130.22.010 Zones Established; Applicability
130.22.020 Matrix of Allowed Uses
130.22.030 Commercial Zone Development Standards

130.22.010 Zones Established; Applicability

A. As provided in the General Plan Policy 2.2.1.2 (Land Use Designations), this Chapter establishes a number of commercial zones to direct specific categories of commercial uses to the appropriate areas of the County.

B. This Chapter lists the uses that are allowed within the Commercial zones established by Section 130.12.020 (Zoning Map and Zones) in Article 1 (Zoning Ordinance Applicability) of this Title, describes the types of planning permit/approval required for each use and provides basic standards for site layout and building size.

C. The various Commercial zones and the manner in which they are applied are as follows.

1. **Commercial, Professional Office (CPO).** The CPO, Professional Office Commercial Zone is intended to regulate the development of land suitable for professional, administrative, and business offices and offices mixed with low to high intensity residential uses. It is intended that this zone be utilized as a transition between residential areas and higher intensity commercial uses by creating an environment which is compatible with surrounding residential uses while providing adequate economic incentive for development of such office space. Retail sales that are incidental to the primary office uses in this zone, are allowed subject to the provisions of the Ordinance.

2. **Commercial, Limited (CL).** The CL, Limited Commercial Zone, designates areas suitable for lower intensity retail sales, office and service needs of the surrounding area while minimizing conflicts with the residential uses and outside traffic into the area. Mixed use development compatible with surrounding uses would also be appropriate.

3. **Commercial, Main Street (CM)**. The CM, Main Street Commercial Zone, allows a wide range of pedestrian-oriented retail, office, and service uses, and mixed use development comprised of commercial and residential uses. Flexible development standards are applied to facilitate preservation of historic structures and to encourage new development compatible with the identity of each unique community. This zone is generally appropriate for historic downtown areas or town centers.

4. **Commercial, Community (CC)**. The CC, Community Commercial Zone, provides for the retail sales, office, and service needs of the residents residing within the surrounding community and accommodates the commercial and service needs of visitors to the County. Mixed use development compatible with General Plan densities is appropriate in this zone.

5. **Commercial, Regional (CR)**. The CR, Regional Commercial Zone, provides for large-scale retail services for a regional trade area. The CR zone applies to regional shopping centers that serve a market beyond the community and are located along arterials and at major intersections that provide convenient automobile access. Residential uses are generally inappropriate in the CR zone.

6. **Commercial, General (CG)**. The CG, General Commercial Zone provides a mix of more intensive commercial uses, such as light manufacturing, automobile repair, and wholesale activity; where outdoor storage or activity commonly occurs; and where residential, civic, and educational uses are limited to avoid conflicts with allowed uses.

7. **Commercial, Rural (CRU)**. The CRU, Commercial Rural Zone is utilized to provide limited commercial uses to support agricultural, tourism, recreational and resource based industry, as well as surrounding residential uses in the Rural Regions.

130.22.020 Matrix of Allowed Uses

Uses are allowed in commercial zones subject to the requirements of this Title as designated in Table 130.22.020 (Allowed Uses and Permit Requirements for the Commercial Zones) below:

Table 130.22.020 – Allowed Uses and Permit Requirements for the Commercial Zones

CPO: **Commercial, Professional Office** **CL:** **Commercial, Limited** **CM:** **Commercial, Main Street** **CC:** **Commercial, Community** **CR:** **Commercial, Regional** **CG:** **Commercial, General** **CRU:** **Commercial, Rural**	P Allowed use (Article 4: Special Use Regulations) A Administrative permit required (130.52.010) TUP Temporary use permit required (130.52.060) CUP Conditional Use Permit required(130.52.021) MUP Minor use permit required (130.52.020) TMA Temporary mobile home permit (130.52.050) — Use not allowed in zone							
Use Type								**Specific Use Regulation**
	CPO	**CL**	**CM**	**CC**	**CR**	**CG**	**CRU**	
Commercial								
Animal Sales and Service: Kennel, commercial	—	—	—	P	P	P	CUP	
Pet Grooming and Pet Stores	—	P	P	P	P	P	—	

Table 130.22.020 – Allowed Uses and Permit Requirements for the Commercial Zones

CPO: Commercial, Professional Office **CL: Commercial, Limited** **CM: Commercial, Main Street** **CC: Commercial, Community** **CR: Commercial, Regional** **CG: Commercial, General** **CRU: Commercial, Rural**	P Allowed use (Article 4: Special Use Regulations) A Administrative permit required (130.52.010) TUP Temporary use permit required (130.52.060) CUP Conditional Use Permit required(130.52.021) MUP Minor use permit required (130.52.020) TMA Temporary mobile home permit (130.52.050) — Use not allowed in zone

Use Type								**Specific Use Regulation**
	CPO	**CL**	**CM**	**CC**	**CR**	**CG**	**CRU**	
Veterinary Clinic	—	P	P	P	P	P	P	
Automotive and Equipment: Fuel Sales	—	P	CUP	P	P	P	CUP	
Paint and Body Shops	—	—	—	CUP	—	P	CUP	
Repair Shops	—	—	—	CUP	CUP	P	CUP	
Sales and Rental	—	—	—	CUP	CUP	P	CUP	
Vehicle Storage	CUP	—	—	CUP	—	P	CUP	130.40.320
Banks and Financial Services	P	P	P	P	P	P	P	
Bars and Drinking Establishments	CUP	P	P	P	P	P	P	
Brewery Large Commercial	—	—	CUP	P	CUP	P	CUP	
Micro Brewery	CUP	CUP	CUP	CUP	P	P	P	
Brewpub	CUP	P	P	P	P	—	P	
Broadcasting and Recording Studio	P	—	P	P	P	P	—	
Building Supply Store	—	—	—	P	P	P	P	130.40.220
Business Support Services	—	—	P	P	P	P	P	
Child Day Care Center	A	A	A	A	A	CUP	P	130.40.110
Commercial Recreation: Arcade	—	P	P	P	P	P	P	
Indoor Entertainment	—	—	P	P	P	—	—	
Indoor Sports and Recreation	—	P	—	P	P	P	—	
Large Amusement Complex	—	—	—	CUP	CUP	—	—	
Outdoor Entertainment	—	—	CUP	CUP	CUP	—	CUP	
Outdoor Sports and Recreation	—	—	—	—	CUP	—	CUP	130.40.210
Contractor's Office: On-site	A	A	A	A	A	A	A	130.40.190
Off-site	TUP	—	TUP	TUP	TUP	TUP	TUP	

Table 130.22.020 – Allowed Uses and Permit Requirements for the Commercial Zones

CPO: Commercial, Professional Office **CL: Commercial, Limited** **CM: Commercial, Main Street** **CC: Commercial, Community** **CR: Commercial, Regional** **CG: Commercial, General** **CRU: Commercial, Rural**	P Allowed use (Article 4: Special Use Regulations) A Administrative permit required (130.52.010) TUP Temporary use permit required (130.52.060) CUP Conditional Use Permit required(130.52.021) MUP Minor use permit required (130.52.020) TMA Temporary mobile home permit (130.52.050) — Use not allowed in zone

Use Type								**Specific Use Regulation**
	CPO	**CL**	**CM**	**CC**	**CR**	**CG**	**CRU**	
Employer-sponsored Child Day Care Center	A	A	—	A	A	A	A	130.40.110
Food and Beverage Retail Sale	—	P	P	P	P	P	P	
Free Food Distribution Center	—	—	—	—	—	CUP	CUP	
Funeral and Internment Services	—	P	CUP	P	—	P	CUP	
Lodging Facilities: Bed and Breakfast Inn	—	CUP	P	P	—	—	P	130.40.170
Health Resort and Retreat Center	—	—	—	P	—	—	P	
Hotel and Motel	CUP	—	P	P	P	—	P	
Maintenance and Repair	—	—	CUP	P	P	P	P	
Medical Services: Hospital	CUP	—	—	P	CUP	CUP	—	
Clinic	CUP	P	P	P	P	—	P	
Long-Term Care Facility	—	CUP		P	—	—	CUP	
Mobile/Manufactured Home Sales Lots	—	—	—	A	—	P	—	130.40.220
Offices: Professional	P	P	P	P	CUP	—	P	
Medical	P	P	P	P	CUP	—	P	
Recycling Facilities	—	—	—	P/A	—	P/A	CUP	130.40.280
Restaurant	CUP	P	P	P	P	—	P	
Retail Sales and Service: Indoor Sales	—	P	P	P	P	P	P	
Outdoor Sales	—	CUP	CUP	P	CUP	P	P	130.40.220
Temporary Outdoor Sales	A/ TUP	TUP[1]	TUP[1]	A/ TUP	A/ TUP	A/ TUP	A/ TUP	
Personal Services	P/ CUP	P	P	P	P	P	P	
Property Services	—	P	—	P	—	P	P	
Specialized Education and Training	P	P	P	P	—	CUP	—	130.40.230

Table 130.22.020 – Allowed Uses and Permit Requirements for the Commercial Zones

CPO: Commercial, Professional Office **CL: Commercial, Limited** **CM: Commercial, Main Street** **CC: Commercial, Community** **CR: Commercial, Regional** **CG: Commercial, General** **CRU: Commercial, Rural**	P Allowed use (Article 4: Special Use Regulations) A Administrative permit required (130.52.010) TUP Temporary use permit required (130.52.060) CUP Conditional Use Permit required(130.52.021) MUP Minor use permit required (130.52.020) TMA Temporary mobile home permit (130.52.050) — Use not allowed in zone

Use Type								**Specific Use Regulation**
	CPO	**CL**	**CM**	**CC**	**CR**	**CG**	**CRU**	
Storage, Self	—	—	—	CUP	—	P	CUP	130.40.320
Trade School: Indoor	CUP	CUP	—	CUP	—	P	CUP	
Outdoor	—	—	—	—	—	CUP	CUP	
Winery: Production	—	—	CUP	—	—	P	P	
Full-service Facilities	—	P	CUP	P	—	—	P	
Industrial								
Laundries, Commercial	—	CUP	—	CUP	—	P	P	
Light Manufacturing	—	—	CUP[2]	CUP	—	P	CUP	
Ceramic products	—	—	CUP[2]	CUP	—	P/CUP[3]	CUP	
Lightweight nonferrous metal casting foundry	—	—	CUP[2]	CUP	—	P/CUP[3]	CUP	
Mineral Exploration and Mining	See Table 130.29.070.1 (Mineral Exploration and Mining)							
Printing and Publishing	—	—	—	CUP	—	P	—	
Research and Laboratory Services	P	—	—	P	—	P	P	
Storage Yard, Equipment and Material: Permanent	—	—	—	—	—	P	CUP	130.40.320
Temporary	TUP	—	—	TUP	TUP	TUP	TUP	
Wholesale Storage and Distribution	—	—	—	CUP	—	P	CUP	
Agricultural								
Nursery, commercial retail	—	P	CUP	CUP	—	P	P	
Packing: off -site products	—	CUP	—	—	—	P	P	
Residential								
Caretaker Unit: Permanent	A	A	A	A	A	A	A	130.40.120
Temporary	TMA	TMA	TMA	TMA	TMA	TMA	TMA	

Table 130.22.020 – Allowed Uses and Permit Requirements for the Commercial Zones

CPO: Commercial, Professional Office **CL: Commercial, Limited** **CM: Commercial, Main Street** **CC: Commercial, Community** **CR: Commercial, Regional** **CG: Commercial, General** **CRU: Commercial, Rural**	P Allowed use (Article 4: Special Use Regulations) A Administrative permit required (130.52.010) TUP Temporary use permit required (130.52.060) CUP Conditional Use Permit required(130.52.021) MUP Minor use permit required (130.52.020) TMA Temporary mobile home permit (130.52.050) — Use not allowed in zone

Use Type								**Specific Use Regulation**
	CPO	**CL**	**CM**	**CC**	**CR**	**CG**	**CRU**	
Child Day Care Home[5, 6] Small family day care home	—	A	—	A	—	—	A	130.40.110
Large family day care home	—	A	—	A	—	—	A	
Community Care Facility: Small or Large	CUP	P	—	P	—	—	P	
Dwelling (as part of a Mixed Use Development)	Permitted by Design Review (See Section 130.52.030 – Design Review Permit in Article 5 – Planning Permit Processing, of this Title)							
Emergency Shelter	—	—	—	CUP	—	P	—	
Employee Housing: Commercial Caretaker, permanent	A	A	A	A	A	A	A	130.40.120
Commercial Caretaker, temporary	TMA	TMA	TMA	TMA	TMA	TMA	TMA	
Construction	—	—	—	—	—	A	A	130.40.190.B.5
Home Occupation[4]	See Table 130.40.160.1 (Home Occupation Use Matrix)							
Transitional Housing: Large, only	—	—	—	CUP	—	A	—	130.40.360
Recreation and Open Space								
Golf Course	—	—	—	CUP	—	—	CUP	
Marina: Motorized Craft	—	—	—	CUP	—	CUP	CUP	
Non-Motorized Craft	—	—	—	P	—	—	P	
Parks: Day Use	A	A	A	A	A	—	A	130.40.210
Nighttime Use	CUP	CUP	CUP	CUP	CUP	—	—	
Snowplay Area	—	—	—	CUP	—	CUP	CUP	
Special Events, Temporary	TUP	TUP	TUP	TUP	TUP	TUP	TUP	
Swimming Pool, Public	—	CUP	—	CUP	—	—	—	130.40.210
Tennis Courts, Public	—	CUP	—	CUP	—	—	—	
Trail Head Parking and Staging Area	—	—	—	CUP	—	CUP	P	

Table 130.22.020 – Allowed Uses and Permit Requirements for the Commercial Zones

CPO: Commercial, Professional Office **CL: Commercial, Limited** **CM: Commercial, Main Street** **CC: Commercial, Community** **CR: Commercial, Regional** **CG: Commercial, General** **CRU: Commercial, Rural**	P Allowed use (Article 4: Special Use Regulations) A Administrative permit required (130.52.010) TUP Temporary use permit required (130.52.060) CUP Conditional Use Permit required(130.52.021) MUP Minor use permit required (130.52.020) TMA Temporary mobile home permit (130.52.050) — Use not allowed in zone

Use Type								**Specific Use Regulation**
	CPO	**CL**	**CM**	**CC**	**CR**	**CG**	**CRU**	
Civic								
Cemeteries	—	—	—	CUP	—	CUP	—	
Churches and Community Assembly Indoor	CUP	CUP	P	P	—	CUP	CUP	
Outdoor	CUP	CUP	CUP	CUP	CUP	—	CUP	
Community Services: Intensive	—	—	—	CUP	CUP	CUP	CUP	
Minor	P	P	P	P	P	—	P	
Schools: College and University	P	—	CUP	P	CUP	—	—	130.40.230
Elementary and Secondary, private	CUP	—	CUP	CUP	—	—	—	
Transportation								
Airports, Airstrips and Heliports	—	—	—	CUP	—	CUP	CUP	
Intermodal Facility	CUP	CUP	CUP	CUP	CUP	P	—	
Parking Lot	P	P	P	P	P	P	P	
Utility and Communications								
Communication Facilities	A/ CUP	A/ CUP	A/ CUP	A/ CUP	A/ CUP	A/ CUP	A/ CUP	130.40.130
Public Utility Service Facilities: Intensive	CUP	—	—	CUP	CUP	CUP	CUP	130.40.250
Minor	P	P	P	P	P	P	P	
Wind Energy Conversion System	See Table 130.40.390.1 (WECS Use Matrix)							130.40.390

NOTES:

[1] Excluding Subsection130.40.220.E (Garage Sales) in Article 4 (Specific Use Regulations) of this Title.
[2] Limited to small-scale, artisanal production of goods (See Article 8 (Glossary: "Light Manufacturing") of this Title.
[3] CUP for larger scale, 'general industrial' use.
[4] As part of the residential component of a mixed use development.
[5] As a rental of an existing legal nonconforming residential structure.

130.22.030 Commercial Zones Development Standards

Allowed uses and associated structures shall comply with the following development standards listed in Table 130.22.030 (Commercial Zones Development Standards) below in this Section, in addition to any other applicable requirements of this Title unless a variance is obtained in compliance with Section 130.52.070 (Variance) in Article 5 (Planning Permit Processing) of this Title, or standards are modified pursuant to a Development Plan permit in compliance with Section 130.52.040 (Development Plan Permit) in Article 5 (Planning Permit Processing) of this Title.

Table 130.22.030 – Commercial Zones Development Standards

Development Attribute	CPO	CL	CM	CC	CR	CG	CRU
Minimum Lot Size[1] (in square feet)	6,000	4,000	None	4,000	100,000[2]	10,000	10,000
Minimum Lot Width (in feet)	60	60	20	60	70	70	100
Residential Density Range for Mixed Use	See Section 130.40.180 (Mixed Use)				N/A		
Setbacks (in feet) Front and secondary front[3]	10	10	Min. 0 Max. 10	10	20	10	30
Sides and Rear[4]	0 or 5	0 or 5	0 or 5	0 or 5	0 or 5	0 or 5	30.
Sides and Rear (Abutting R, R1A, R2A, R3A, and RE Zoned Land)[5]	10 or 30					30	
Maximum Building Height (in feet)	50	50	50	50	50	50	40
Floor Area Ratio[6]	.85	.85	2.0	.85	.85	.85	.50

Notes:

1 Mixed use development and commercial condominiums subject to Section 130.40.180 (Mixed Use Development) in Article 4 (Specific Use Regulations) of this Title.

2 Does not limit the creation of new smaller lots within a regional commercial facility.

3 Subject to Landscaping requirements in the site planning and design manual.

4 Zero lot line with fireproof wall and no openings, meeting building and fire code requirements, otherwise the 5 foot setback applies.

5 Subject to Landscaping Ordinance requirements in the site planning and design manual.

6 Ratio of allowable floor area to lot area.

7 Lots that are created for access road, parking areas, common area landscaping and open space purposes are exempt from the area and width standards of the respective zones.

CHAPTER 130.23 – INDUSTRIAL AND RESEARCH AND DEVELOPMENT ZONES

Sections:

130.23.010 Zones Established; Applicability
130.23.020 Matrix of Allowed Uses
130.23.030 Development Standards
130.23.040 Design Standards

130.23.010 Zones Established; Applicability

A. This Chapter establishes several Industrial zones to provide for a full range of light and heavy manufacturing, including manufacturing, processing, distribution and storage. In addition, a Research and Development Zone is established to provide areas for high technology, non-polluting manufacturing plants, research and development facilities, corporate/industrial offices, and support service facilities in a rural or campus-like setting, such as a business park environment. [See General Plan Policy 2.2.1.2 (Land Use Designations)]

B. This Chapter further provides regulations applicable to each industrial zone established in Section 130.12.020 (Zoning Maps and Zones) in Article 1 (Zoning Ordinance Applicability) of this Title. The Industrial zones are as follows:

1. **Industrial – Light (IL).** The IL zone is applied to lands for manufacturing and associated retail or service activities, wholesaling, and other industrial uses, where the primary activity is conducted within a building or buildings, or in outdoor storage or activity areas. Conditional Use Permits shall be required for those uses which, by their nature, have the potential to produce or emit noise, odor, fumes, dust, smoke, vibrations, glare, heat, electrical interference or waste material beyond the confines of the property boundaries.

2. **Industrial – Heavy (IH).** The IH zone is applied to areas which may also be suitable for more intensive industrial uses, including manufacturing, assembling, fabrication and processing, bulk handling, storage, warehousing and trucking. The uses associated with this district are likely to generate significant levels of truck traffic, noise, pollution, vibration, dust, fumes, odors, radiation, radioactivity, poisons, pesticides, herbicides, or other hazardous materials, fire or explosion hazards, or other undesirable conditions. A Conditional Use permit is required for uses having the potential to pose a safety hazard or produce particulate matter. Heavy industrial districts are unsuitable adjacent to residential districts and some commercial uses. Dwellings, care centers, and certain commercial uses are not allowed. Uses allowed within IL (Light Industrial) districts are allowed, provided that the uses are subordinate to and do not restrict heavy industrial uses in the zone. Activity at heavy industrial sites consists predominantly of trucks, rather than

passenger vehicles, and the road system is built to support truck traffic. Provisions for pedestrians are not required.

3. **Research and Development (R&D).** The R&D, Research and Development zone is intended to provide areas for the location of high technology, non-polluting manufacturing plants, research and development facilities, corporate and industrial offices, and support service facilities in a rural or campus-like setting, such as a business park environment.

130.23.020 Matrix of Allowed Uses

Uses are allowed in the following zones subject to the requirements of this Title as designated in Table 130.23.020 (Industrial / R&D Zones Use Matrix) below in this Section:

Table 130.23.020 – Industrial / R&D Zones Use Matrix

IL: Industrial Low **IH: Industrial High** **R&D: Research & Development**	P Allowed use (Article 4: Special Use Regulations) A Administrative permit required (130.52.010) TUP Temporary use permit required (130.52.060) CUP Conditional use Permit required(130.52.021) MUP Minor use permit required (130.52.020) TMA Temporary mobile home permit (130.52.050) — Use not allowed in zone			
USE TYPE	**IL**	**IH**	**R&D**	**Specific Use Reg.**
Industrial				
Automotive and Equipment: Salvage and Wrecking Yard	CUP	CUP	—	
Hazardous Material Handling	CUP	CUP	CUP	
Industrial: General	P/CUP	P/CUP	CUP	
Specialized	CUP	CUP	–	
Laundries, Commercial	P	–	–	
Light Manufacturing	P	–	P	
Ceramic products from compounded clay	P	–	P/CUP[1]	
Lightweight nonferrous metal casting foundry				
Mineral Exploration and Mining	See Table 130.29.070.1 (Mineral Exploration and Mining)			
Printing and Publishing	P	–	P	
Research and Laboratory Services	P	–	P	
Slaughterhouse	CUP	CUP	–	

Table 130.23.020 – Industrial / R&D Zones Use Matrix

IL: Industrial Low **IH: Industrial High** **R&D: Research & Development**	P Allowed use (Article 4: Special Use Regulations) A Administrative permit required (130.52.010) TUP Temporary use permit required (130.52.060) CUP Conditional use Permit required(130.52.021) MUP Minor use permit required (130.52.020) TMA Temporary mobile home permit (130.52.050) — Use not allowed in zone			
USE TYPE	**IL**	**IH**	**R&D**	**Specific Use Reg.**
Storage Yard: Equipment and Material Permanent	P	P	CUP	130.40.320.C
Temporary	TUP	TUP	TUP	
Wholesale Storage and Distribution	P	P	P	
Commercial				
Adult Business Establishment	A	—	—	130.40.040
Animal Sales and Service: Veterinary Clinics	CUP	—	CUP	
Automotive and Equipment: Paint and Body Shops	P	CUP	—	
Repair Shop	P	CUP	—	
Vehicle Storage	P	CUP	—	130.40.320
Banks and Financial Services	—	—	P	
Bars and Drinking Establishments	CUP	—	—	
Brewery: Large Commercial	P	CUP	CUP	
Micro Brewery	P	CUP	CUP	
Building Supply Store	P	—	—	130.40.220
Business Support Services	P	—	P	
Distillery[3]	P	CUP	CUP	
Commercial Recreation: Indoor Entertainment	—	—	A/CUP	
Indoor Sports and Recreation	CUP	—	P	
Outdoor Entertainment	—	—	CUP	
Outdoor Sports and Recreation	—	—	P	130.40.210
Employer-sponsored Child Day Care Center	A	—	A	130.40.110.C
Mobile/Manufactured Home Sales Lot	A	—	—	130.40.220
Offices: Professional and Medical	P	—	P	

Table 130.23.020 – Industrial / R&D Zones Use Matrix

IL: Industrial Low **IH: Industrial High** **R&D: Research & Development**	P Allowed use (Article 4: Special Use Regulations) A Administrative permit required (130.52.010) TUP Temporary use permit required (130.52.060) CUP Conditional use Permit required(130.52.021) MUP Minor use permit required (130.52.020) TMA Temporary mobile home permit (130.52.050) — Use not allowed in zone			
USE TYPE	**IL**	**IH**	**R&D**	**Specific Use Reg.**
Printing and Publishing	P	—	P	
Recycling Facilities	P/A	P	—	130.40.280
Restaurant	P[2]	—	P	
Retail Sales and Service: Indoor Sales	CUP	—	P	
Permanent Outdoor Sales	A	CUP	A/CUP	130.40.220
Temporary Outdoor Sales	A/TUP	A/TUP	A/TUP	
Personal Services	—	—	P	
Property Services	P	—	P	
Specialized Education and Training	—	—	P	
Trade School, indoor or outdoor	P	—	CUP	
Wineries[3] Production Facilities	P	P	CUP	
Residential				
Contractor's Office: On-site	A	A	A	130.40.190
Off-site	TUP	TUP	TUP	
Employee Housing: Commercial Caretaker, permanent	A	CUP	A	130.40.120
Commercial Caretaker, temporary	TMA	—	TMA	
Construction	A	A	—	130.40.190
Civic				
Cemetery	CUP	—	—	
Churches and Community Assembly Indoor only	—	—	CUP	
Community Services: Intensive	P	—	P	
Schools: College and University	—	—	CUP	130.40.230

Table 130.23.020 – Industrial / R&D Zones Use Matrix

IL: Industrial Low **IH: Industrial High** **R&D: Research & Development**	P Allowed use (Article 4: Special Use Regulations) A Administrative permit required (130.52.010) TUP Temporary use permit required (130.52.060) CUP Conditional use Permit required(130.52.021) MUP Minor use permit required (130.52.020) TMA Temporary mobile home permit (130.52.050) — Use not allowed in zone			
USE TYPE	**IL**	**IH**	**R&D**	**Specific Use Reg.**
Elementary and Secondary, private	—	—	CUP	
Transportation				
Airports, Airstrips, and Heliports	CUP	CUP	CUP	
Intermodal Facility	P	—	P	
Parking Lot, Public	P	—	P	
Utility and Communication				
Communication Facilities	P/A	CUP	P/A	130.40.130
Public Utility Service Facilities: Intensive	CUP	CUP	—	130.40.250
Minor	P	—	P	
Wind Energy Conversion System		See Table 130.40.390.1 (WECS Use Matrix)		130.40.390
Recreation and Open Space				
Special Events, temporary	TUP	—	TUP	
Agricultural				
Crop Production	—	P	—	
Grazing	—	P	—	
Livestock, High Density	—	CUP	—	
Nursery, plants: Wholesale	P	P	—	
Orchards and Vineyards	—	P	—	
Packing: On-site products	P	P	—	
Off-site products	P	P	—	
Produce Sales	—	CUP	—	
Timber	—	P	—	

Table 130.23.020 – Industrial / R&D Zones Use Matrix

IL: Industrial Low **IH: Industrial High** **R&D: Research & Development**	P Allowed use (Article 4: Special Use Regulations) A Administrative permit required (130.52.010) TUP Temporary use permit required (130.52.060) CUP Conditional use Permit required(130.52.021) MUP Minor use permit required (130.52.020) TMA Temporary mobile home permit (130.52.050) — Use not allowed in zone			
USE TYPE	**IL**	**IH**	**R&D**	**Specific Use Reg.**
NOTES: [1] CUP for larger, general industrial-scale use. [2] On-site cafeteria for employee use only. [3] Not subject to Section 130.40.400 (Wineries) in Article 4 (Specific Use Regulations) of this Title.				

130.23.030 Development Standards

Allowed uses and associated structures shall comply with the following development standards listed in Table 130.23.030 (Industrial / R&D Zone Development Standards) below, in addition to those under Section 130.23.040 (Design Standards) below in this Section, and any other applicable requirements of this Title unless a variance is obtained in compliance with Section 130.52.070 (Variance) in Article 5 (Planning Permit Processing) of this Title, or standards are modified pursuant to a Development Plan permit in compliance with Section 130.52.040 (Development Plan Permit) in Article 5 (Planning Permit Processing) of this Title.

Table 130.23.030 – Industrial / R&D Zones Development Standards

Development Attribute	**IL**	**IH**	**R&D**	
Minimum Lot Size (in square feet)[5]	10,000	20,000	10,000	
Minimum Lot Width (in feet)[5]	60	60	60	
Setbacks: (in feet) Front and secondary front[1]	10	30	20	
Sides	0[2] or 5	30	0[2] or 5	
Rear	10	30	10	
Sides and Rear (Abutting residentially zoned land)[3]	10 or 30	50	10 or 30	
Maximum Building Height (in feet)	50	50	50	
Floor Area Ratio (FAR)[4]	0.85	0.85	0.50	

Notes:
[1] Subject to Landscaping requirements in the site planning and design manual.
[2] Zero lot line with fireproof wall and no openings meeting building and fire code requirements, otherwise the 5 foot setback applies.
[3] Subject to Landscaping requirements in the site planning and design manual.
[4] Ratio of allowable floor area to site area.
[5] Lots that are created for access road, parking areas, common area landscaping and open space purposes are exempt from the area and width standards of the respective zones.

130.23.040 Design Standards

A. **Research and Development Zones.** Design standards for the Research and Development Zone are contained in the County's adopted Research and Development Zone Design Standards (Resolution 201-2015). The Design Review process, where applicable, shall determine whether the structure is in compliance with the adopted design standards.

THIS PAGE INTENTIONALLY LEFT BLANK

CHAPTER 130.24 — RESIDENTIAL ZONES

Sections:

130.24.010 Zones Established; Applicability
130.24.020 Matrix of Allowed Uses
130.24.030 Residential Zone Development Standards

130.24.010 Zones Established; Applicability

A. This Chapter establishes residential zones as provided in the General Plan to accommodate a range of housing types, including single-family and multi-family housing for households of various income levels.

B. This Chapter lists the uses that may be allowed within the residential zones established by Section 130.12.020 (Zoning Map and Zones) in Article 1 (Zoning Ordinance Applicability) of this Title, determines the type of planning permit/approval required for each use, and provides basic standards for site layout and building size.

C. The manner in which the single-unit and multi-unit residential zones are applied are as follows:

1. **Multi-unit Residential (RM).** The RM, Multi-unit Residential Zone identifies those lands which are most capable of supporting the highest density of development within the County, based on topography, infrastructure, and circulation availabilities and constraints, as well as proximity to employment centers, public facilities, recreation, and shopping. It is applied to regulate and promote the development of multi-unit dwellings, including apartments, condominiums, and townhouses, while ensuring compatibility with surrounding lower density residential neighborhoods. Detached or attached residential dwellings are allowed in accordance with the standards set forth in this Chapter, and providing the minimum density of at least 5 dwelling units per acre is met. This zone is utilized in Community Regions and Rural Centers to meet affordable housing goals identified in the Housing Element of the General Plan. Mobile home and manufactured home land lease development shall also be allowed within this zone (see General Plan Policy 2.2.1.2). This zone is applicable to lands designated as Multi-Family Residential (MFR) in the General Plan.

2. **Single-unit Residential (R).** The Single-unit Residential Zone is used to promote and regulate the development of higher density, single-unit dwellings, and accessory structures and uses. Minimum lot size designations of R1 and R20K are applied to this zone based on surrounding use compatibility, and physical and infrastructural constraints. Said designations

represent the minimum lot size of 6,000 and 20,000 square feet, respectively. This zone is applicable to lands designated as High Density Residential (HDR) in the General Plan.

3. **One-acre Residential (R1A).** The R1A, One-acre Residential Zone, is used to create a more dispersed suburban residential character to an area by providing for and regulating medium density residential development at the highest range of one dwelling unit per acre. Accessory structures and uses and low-intensity commercial agricultural pursuits (crop lands, orchards, raising and grazing of domestic farm animals) are considered compatible with this zone. This zone is applicable to lands designated as Medium Density Residential (MDR) in the General Plan and may be applied to High Density Residential lands where infrastructure to serve higher densities is not yet available.

4. **Two-acre Residential (R2A).** The R2A, Two-acre Residential Zone, is utilized to create a more dispersed suburban residential character to an area by providing for and regulating medium density residential development at the mid-range of one dwelling unit per two acres. Accessory structures and uses and low-intensity commercial agricultural pursuits (crop lands, orchards, raising and grazing of domestic farm animals) are considered compatible with this zone. This zone is applicable to lands designated as Medium Density Residential (MDR) in the General Plan.

5. **Three-acre Residential (R3A).** The R3A, Three-acre Residential Zone, is utilized to create a more dispersed residential character to an area by providing for and regulating the development of medium density residential development at the lowest range of one dwelling unit per three acres. Agricultural structures and low-intensity commercial agricultural pursuits (crop lands, orchards, raising and grazing of domestic farm animals) are considered compatible with this zone. This zone is applicable to lands designated as Medium Density Residential (MDR) in the General Plan.

6. **Residential Estate (RE)**. The RE, Residential Estate Zone is intended to preserve the rural character of an area by providing for and regulating the development of low density and rural residential development at a range of densities to include one dwelling unit per five acres and one dwelling per 10 acres. Minimum lot size designations of —5 and —10 are applied to this zone based on surrounding use compatibility, physical and infrastructural constraints, and General Plan use designation. Said designations represent the minimum number of acres allowed for each lot. Agricultural structures and uses are considered compatible with this zone.

130.24.020 Matrix of Allowed Uses

Uses are allowed in the following zones subject to the requirements of this Title as designated in Table 130.24.020 (Residential Zone Use Matrix) below in this Section:

Table 130.24.020 – Residential Zone Use Matrix

RM: **Multi-unit Residential** **R1, R20K:** **Single-unit Residential** **R1A:** **One-acre Residential** **R2A:** **Two-acre Residential** **R3A:** **Three-acre Residential** **RE:** **Residential Estate**	P Allowed use PD Planned Development Permit required (130.52.040) A Administrative Permit required (130.52.010) CUP Conditional Use Permit (130.52.021) MUP Minor use Permit required (130.52.020) TMA Temporary Mobile Home Permit required (130.52.050) TUP Temporary use permit required (130.52.060) — Use not allowed in zone

USE TYPE	**RM**	**R1, R20K**	**R1A**	**R2A**	**R3A**	**RE**	**Specific Use Reg.**
Residential							
Child Day Care Home: Small Family Day Care Home	P	P	P	P	P	P	130.40.110
Large Family Day Care Home	CUP	A	A	A	A	A	130.40.110
Community Care Facility: Small (serving 6 or fewer)	P	P	P	P	P	P	
Large (serving 7 or more)	CUP	CUP	CUP	CUP	CUP	CUP	
Dwelling: Multi-unit	P	—	—	—	—	—	
Single-unit, attached	P	P	—	—	—	—	
Single-unit, detached	P[1]	P	P	P	P	P	
Temporary During Construction	—	P	P	P	P	P	130.40.190
Employee Housing: Agricultural- Six or fewer	—	P	P	P	P	P	
Seasonal Worker in compliance with standards	—	—	A	A	A	A	130.40.120
Seasonal Worker not in compliance with standards	—	—	CUP	CUP	CUP	CUP	
Construction	TUP	TUP	TUP	TUP	TUP	TUP	130.40.190
Guest House	—	P	P	P	P	P	130.40. 150
Hardship Mobile Home	—	TMA	TMA	TMA	TMA	TMA	130.40.190
Kennel, private	—	—	—	—	—	CUP	130.40.080

Table 130.24.020 – Residential Zone Use Matrix

RM: **Multi-unit Residential** **R1, R20K:** **Single-unit Residential** **R1A:** **One-acre Residential** **R2A:** **Two-acre Residential** **R3A:** **Three-acre Residential** **RE:** **Residential Estate**	P Allowed use PD Planned Development Permit required (130.52.040) A Administrative Permit required (130.52.010) CUP Conditional Use Permit (130.52.021) MUP Minor use Permit required (130.52.020) TMA Temporary Mobile Home Permit required (130.52.050) TUP Temporary use permit required (130.52.060) — Use not allowed in zone

USE TYPE	**RM**	**R1, R20K**	**R1A**	**R2A**	**R3A**	**RE**	**Specific Use Reg.**
Mobile/Manufactured Home Park	CUP	CUP	CUP	CUP	CUP	CUP	130.40.190 Also refer to adopted Mobile Home Park Design Standards (Resolution 198-2015)
Room Rental: One bedroom, only	P	P	P	P	P	P	
Secondary Dwelling	—	P	P	P	P	P	130.40. 300
Transitional Housing: Small (serving 6 or fewer)	P	P	P	P	P	P	130.40.360
Large (serving 7 or more)	CUP	CUP	CUP	CUP	CUP	CUP	
Agricultural							
Animal Raising and Keeping	See Table in 130.40.080.1 (Animal Raising & Keeping Matrix)						130.40.080
Accessory Structures	—	P	P	P	P	P	130.40.030
Crop Production	—	—	P	P	P	P	
Grazing	—	—	P	P	P	P	
Nursery, plants: Wholesale	—	—	—	—	—	P	
Orchards and Vineyards: Commercial	P	P	P	P	P	P	
Packing, on-site products	P	P	P	P	P	P	
Processing of Agricultural Products; Commercial			CUP	CUP	CUP	CUP	130.40.160
Produce Sales Sale of produce grown on-site	—	A	P	P	P	P	130.40.240
Commercial							
Child Day Care Center	—	—	—	—	—	—	130.40.110
Contractor's Office	TUP	TUP	TUP	TUP	TUP	TUP	130.40.190
Stables; Commercial	—	—	—	—	—	CUP	130.40.210
Home Occupation	See Table in 130.40.160.1 (Home Occupation Use Matrix)						130.40.160

Table 130.24.020 – Residential Zone Use Matrix

RM: **Multi-unit Residential** **R1, R20K:** **Single-unit Residential** **R1A:** **One-acre Residential** **R2A:** **Two-acre Residential** **R3A:** **Three-acre Residential** **RE:** **Residential Estate**	P Allowed use PD Planned Development Permit required (130.52.040) A Administrative Permit required (130.52.010) CUP Conditional Use Permit (130.52.021) MUP Minor use Permit required (130.52.020) TMA Temporary Mobile Home Permit required (130.52.050) TUP Temporary use permit required (130.52.060) — Use not allowed in zone

USE TYPE	**RM**	**R1, R20K**	**R1A**	**R2A**	**R3A**	**RE**	**Specific Use Reg.**
Lodging Facilities	CUP	CUP	CUP	CUP	CUP	CUP	130.40.170
Mixed Use Development	P[2]	—	—	—	—	—	130.40.180
Outdoor Retail Sales: Garage Sales	P	P	P	P	P	P	130.40.220
Seasonal Sales	—	—	—	—	—	A	
Temporary Real Estate Sales Office	A	A	A	A	A	A	130.40.330
Wineries	—	—	—	—	—	CUP[3]	130.40.400
Industrial							
Mineral Exploration	A	A	A	A	A	A / CUP	Chapter 130.29
Mining	CUP	CUP	CUP	CUP	CUP	CUP	
Storage Yard: Equipment and Material Temporary	TUP	TUP	TUP	TUP	TUP	TUP	
Recreation and Open Space							
Golf Course	CUP	CUP	CUP	CUP	CUP	CUP	130.40.210
Hiking and Equestrian Trail	P	P	P	P	P	P	
Marina, Non-motorized Craft	—	—	—	—	—	CUP	
Off -highway or Off-road Vehicle Area	—	—	—	—	—	A	
Parks (Public): Day Use	P	P	P	P	P	P	
Nighttime Use	CUP	CUP	CUP	CUP	CUP	CUP	
Picnic Area	P	P	P	P	P	P	
Private Recreation Area	PD/ CUP	PD/CUP	PD/CUP	PD/ CUP	PD/ CUP	PD/ CUP	
Resource Protection and Restoration	P	P	P	P	P	P	
Swimming Pool, public	CUP	CUP	CUP	CUP	CUP	CUP	130.40.210

Table 130.24.020 – Residential Zone Use Matrix

RM: **Multi-unit Residential** **R1, R20K:** **Single-unit Residential** **R1A:** **One-acre Residential** **R2A:** **Two-acre Residential** **R3A:** **Three-acre Residential** **RE:** **Residential Estate**	P Allowed use PD Planned Development Permit required (130.52.040) A Administrative Permit required (130.52.010) CUP Conditional Use Permit (130.52.021) MUP Minor use Permit required (130.52.020) TMA Temporary Mobile Home Permit required (130.52.050) TUP Temporary use permit required (130.52.060) — Use not allowed in zone

USE TYPE	**RM**	**R1, R20K**	**R1A**	**R2A**	**R3A**	**RE**	**Specific Use Reg.**
Tennis Court, public	CUP	CUP	CUP	CUP	CUP	CUP	
Trail Head Parking or Staging Area	—	CUP	CUP	CUP	CUP	CUP	
Civic							
Cemetery	CUP	CUP	CUP	CUP	CUP	CUP	
Churches and Community Assembly	CUP	CUP	CUP	CUP	CUP	CUP	
Community Services: Minor	CUP	CUP	CUP	CUP	CUP	CUP	
Schools: Elementary and Secondary, private	CUP	CUP	CUP	CUP	CUP	CUP	130.40.230
Utility							
Communication Facilities	A / CUP	A / CUP	A / CUP	A / CUP	A / CUP	A / CUP	130.40.130
Public Utility Service Facilities: Intensive	CUP	CUP	CUP	CUP	CUP	CUP	130.40.250
Minor	P	P	P	P	P	P	
Wind Energy Conversion System	See Table 130.40.390.1 (WECS Use Matrix)						130.40.390

NOTES:

[1] Requires minimum General Plan density to be met. Planned Development application required unless in compliance with adopted Traditional Neighborhood Design standards found in the site planning and design manual.

[2] Allowed as part of a Mixed Use Development, residential component meets minimum General Plan density requirement and is subject to Section 130.40.180 (Mixed Use Development) in Article 4 (Specific Use Regulations) of this Title.

[3] Or as otherwise permitted under Section 130.40.400 (Wineries) in Article 4 (Specific Use Regulations) of this Title.

130.24.030 Residential Zone Development Standards

Allowed uses and associated structures shall comply with the following development standards in Table 130.24.030 below in this Section, in addition to any other applicable requirements of this Title, unless a variance is obtained in compliance with Section 130.52.070 (Variance) in Article 5 (Planning Permit Processing) of this Title, or standards are modified pursuant to a Development Plan permit in compliance with Section 130.52.040 (Development Plan Permit) in Article 5 (Planning Permit Processing) of this Title.

Table 130.24.030 – Residential Zones Development Standards

Development Attribute[2]	RM[3]	R1	R20K	R1A	R2A	R3A	RE
Minimum Lot Size for Interior Lot	6,000 or 2,000 sq ft	6,000 sq ft	20,000 sq ft	1 acre	2 acre	3 acre	5 acres or 10 acres as designated
Minimum Lot Size for Corner Lot	7,500 or 3,500 sq ft	7,500 sq ft	20,000 sq ft	1 acre	2 acre	3 acre	5 acres or 10 acres as designated
Minimum Lot Width for Interior Lot (in feet)	60 or 20	60	100	100	150	150	100
Minimum Lot Width for Corner Lot (in feet)	75 or 35	75	100	100	150	150	100
Residential Density Range	See G.P. Policy 2.2.1.2 (MFR)	1 primary plus 2nd dwelling unit per lot					
Setbacks[1]: (in feet) Front	20	20	30	30	30	30	30
Secondary Front	10	15	20	25	30	30	30
Side[4, 5]	5	5	10	15	20	30	30
Rear	10	15	30	30	30	30	30
Agricultural Structure	—	50	50	50	50	50	50
Maximum Height (in feet)	50	40	40	45	45	45	45

NOTES:

[1] May be subject to agricultural setbacks under Section 130.30.030 (Setback Requirements and Exceptions) in Article 3 (Site Planning and Project Design Standards) of this Title if adjacent to agricultural zones or fire safe setbacks if over one acre in lot size.

[2] Lots that are created for access road, parking areas, common area landscaping and open space purposes are exempt from the area and width standards of the respective zones

[3] Smaller minimum lot area or lot width is allowed when proposed with attached or small lot design detached units.

[4] Fire Safe setbacks may apply.

[5] May be subject to special side yard setbacks due to building height under Section 130.30.060 (Height Limits and Exceptions) in Article 3 (Site Planning and Project Design Standards) of this Title.

CHAPTER 130.25 – SPECIAL PURPOSE ZONES

Sections:

130.25.010 Zones Established; Applicability
130.25.020 Matrix of Allowed Uses
130.25.030 Special Purpose Zone Development Standards

130.25.010 Zones Established; Applicability

A. Special purpose zones are used to provide for, promote and regulate certain recreational, transportation and open space uses.

B. This Chapter lists the uses that may be allowed within the special purpose zones established by Section 130.12.020 (Zoning Map and Zones) in Article 1 (Zoning Ordinance Applicability) of this Title, determines the type of planning permit/approval required for each use, and provides basic standards for site layout and building size.

C. Special purpose zones and the manner in which they are applied are as follows:

1. **Recreational Facilities, Low-Intensity (RFL).** The RFL Zone is applied to regulate and promote dispersed recreational and tourist accommodating uses and activities primarily in Rural Regions or Rural Centers of the County where such uses are compatible with adjacent or nearby rural residential, agricultural or resource development. Uses include but are not limited to camping, picnicking, equestrian staging, and river put-in and take-out.

2. **Recreational Facilities, High-Intensity (RFH).** The RFH Zone applies to regulate and promote recreational uses and activities with high concentrations of people or activities of a more urban nature, such as recreational vehicle parks, sports fields and complexes, and amusement parks or facilities that are primarily located in Community Regions and Rural Centers.

3. **Transportation Corridor (TC).** The TC Zone is intended to protect and preserve established and identified future transportation corridors within the County, including corridors for motor vehicle, bicycle, hiking, equestrian, and rail transportation.

4. **Open Space (OS).** The OS Zone is applied to set aside for primarily open space purposes including, but not limited to, the protection of rare and endangered plant or animal habitat; wildlife habitat, such as critical winter deer range and migration corridors; sensitive riparian areas; oak woodlands; visual resources as a part of a development plan or along a designated scenic corridor; and watersheds and groundwater recharge areas. Intensive

agriculture is not compatible, although low intensity agriculture such as seasonal grazing may be compatible. Recreational uses that have little impact and do not require substantial permanent structures or facilities are also compatible.

The OS Zone can also designate land set aside to protect agricultural lands covered by an open space easement or as a part of a development plan in an Agricultural District, as identified on the General Plan land use maps, or on other identified agricultural lands.

Where the OS Zone is applied as part of a development plan, the uses allowed under the development plan permit are allowed, including a full range of recreational facilities.

Where the County determines it is necessary or in the public interest, limited infrastructure, including but not limited to, roads, water, wastewater, drainage facilities and other utilities are expressly allowed in the OS zone.

130.25.020 Matrix of Allowed Uses

Uses are allowed in Special purpose zones subject to the requirements of this Title as designated in Table 130.25.020 (Special Purpose Zones Use Matrix) below in this Section:

Table 130.25.020 – Special Purpose Zones Use Matrix

RFL: Recreation Facility-Low **RFH: Recreation Facility-High** **TC: Transportation Corridor** **OS: Open Space**	P Allowed use A Administrative permit required (130.52.010) TUP Temporary use permit required (130.52.060) CUP Conditional Use Permit (130.52.021) MUP Minor use permit required (130.52.020) TMA Temporary mobile home permit (130.52.050) — Use not allowed in zone				
USE TYPE	**RFL**	**RFH**	**TC**	**OS**	**Specific Use Regulation**
Agricultural					
Grazing	P	—	—	P	
Timber	P	—	—	CUP	
Recreation and Open Space					
Campground	CUP	CUP	—	—	130.40.100
Golf Course	CUP	CUP	—	CUP[1]	130.40.210
Hiking and Equestrian Trail	P	P	P	P	

Table 130.25.020 – Special Purpose Zones Use Matrix

RFL: Recreation Facility-Low **RFH: Recreation Facility-High** **TC: Transportation Corridor** **OS: Open Space**	P Allowed use A Administrative permit required (130.52.010) TUP Temporary use permit required (130.52.060) CUP Conditional Use Permit (130.52.021) MUP Minor use permit required (130.52.020) TMA Temporary mobile home permit (130.52.050) — Use not allowed in zone

USE TYPE	RFL	RFH	TC	OS	Specific Use Regulation
Hunting/Fishing Club, Farm	A	A	—	A	
Hunting/Fishing Club, Farm Facilities	CUP	CUP	—	CUP	
Marina, motorized craft	CUP	CUP	—	—	
Marina, non-motorized craft	A	A	—	CUP	
Off-road Vehicle Recreation Area	CUP	CUP	—	—	
Parks: Day Use	P	P	—	CUP	
Nighttime Use	A	A	—	—	
Picnic Area	P	P	P	P	
Private Recreation Area	P[1]	P[1]	—	P[1]	
Recreational Vehicle Park	—	CUP	—	—	130.40.100
Resource Protection and Restoration	P	P	P	P	
River Put-in and Take-out	A	A	—	CUP	
Ski Area	CUP	CUP	—	—	130.40.210
Snow Play Area	A	A	—	CUP	
Special Events, Temporary	TUP	TUP	—	TUP	
Stable, commercial	A	A	—	—	
Swimming Pool, public	A	A	—	—	130.40.210
Tennis Court, public	A	A	—	—	
Trail Head Parking or Staging Area	A/CUP	A	A	A/ CUP	
Residential					
Employee Housing: Commercial Caretaker Permanent	A	A	—	—	130.40.120
Temporary	TMA	TMA	—	—	

Table 130.25.020 – Special Purpose Zones Use Matrix

RFL: Recreation Facility-Low **RFH: Recreation Facility-High** **TC: Transportation Corridor** **OS: Open Space**	P Allowed use A Administrative permit required (130.52.010) TUP Temporary use permit required (130.52.060) CUP Conditional Use Permit (130.52.021) MUP Minor use permit required (130.52.020) TMA Temporary mobile home permit (130.52.050) — Use not allowed in zone

USE TYPE	RFL	RFH	TC	OS	Specific Use Regulation
Commercial					
Automotive and Equipment: Fuel Sales	CUP[2]	CUP[2]	—	—	
Commercial Recreation: Arcade	—	P	—	—	
Indoor Entertainment	A	P	—	—	
Large Amusement Complex	—	CUP[3]	—	—	
Outdoor Entertainment	CUP	A	—	—	
Outdoor Sports and Recreation	A/CUP	A	—	—	130.40.210
Off Highway or Off Road Recreation Area	CUP	CUP			130.40.210.E
Contractor's Office	TUP	TUP	—	—	130.40.190
Food, Beverage & General Merchandise Sales	CUP	CUP	—	—	
Lodging Facilities: Guest Ranch	A	—	—	—	130.40.170
Health Resort and Retreat Center	A	A	—	—	
Hotels and Motels	—	CUP[3]	—	—	
Seasonal Sales	—	A	TUP	A	130.40.220
Specialized Education and Training	—	CUP	—	—	130.40.230
Industrial					
Storage Yard: Equipment and Material Permanent	—	—	A	—	130.40.320
Temporary	—	TUP	TUP	—	
Mineral Exploration	A/ CUP	A/ CUP	—	—	Chapter 130.29
Mining, Subsurface	CUP	CUP	—	—	
Civic					
Community Services: Minor	CUP	CUP	—	—	

Table 130.25.020 – Special Purpose Zones Use Matrix

RFL: Recreation Facility-Low **RFH: Recreation Facility-High** **TC: Transportation Corridor** **OS: Open Space**	P Allowed use A Administrative permit required (130.52.010) TUP Temporary use permit required (130.52.060) CUP Conditional Use Permit (130.52.021) MUP Minor use permit required (130.52.020) TMA Temporary mobile home permit (130.52.050) — Use not allowed in zone				
USE TYPE	**RFL**	**RFH**	**TC**	**OS**	**Specific Use Regulation**
Transportation					
Intermodal Facility	—	CUP	P	—	
Parking Lot, Public	—	—	P	—	
Utility and Communication					
Communication Facilities	A/ CUP	A/ CUP	CUP	CUP	130.40.130
Public Utility Service Facilities: Intensive	—	—	CUP	CUP	130.40.250
Minor	P	P	CUP	CUP	
Wind Energy Conversion System	See Table 130.40.390.1 (WECS Use Matrix)				130.40.390

Notes:
[1] As part of an approved development plan or subdivision.
[2] Accessory to Off highway or off road vehicle recreational uses
[3] In Community Regions, only.

130.25.030 Special Purpose Zone Development Standards

Allowed uses and associated structures shall comply with the following development standards listed in Table 130.25.030 (Special Purpose Zone Development Standards) below in this Section, in addition to any other applicable requirements of this Title, unless a variance is obtained in compliance with Section 130.52.070 (Variance) in Article 5 (Planning Permit Processing) of this Title.

Table 130.25.030 – Special Purpose Zone Development Standards

Development Attribute	**RFL**	**RFH**	**TC**	**OS**
Minimum Lot Size	5 acres	20,000 sq. ft.	None	None
Setbacks: (in feet) Front and secondary front	50	50	None	50
Sides	50	50	None	50
Rear	50	50	None	50
Maximum Height (in feet)	35	35	None	25
[1] Lots that are created for access road, parking areas, common area landscaping and open space purposes are exempt from the area and width standards of the respective zones				

CHAPTER 130.26— MEYERS AREA PLAN (MAP) ZONE

Sections:

130.26.010 Zones Established
130.26.020 Applicability
130.26.030 Zone Designations
130.26.040 Uses Allowed by Right or by Conditional Use Permit
130.26.050 Matrix of Allowed Uses
130.26.060 Development Standards

130.26.010 Zone Established

The MAP Zone is applied to implement the policies of the Meyers Area Plan by setting forth separate and distinct uses and standards which apply to each of the five areas of the Meyers Community. As noted in the Sections which follow, the allowed uses and development standards may vary for each designated area as a means of implementing the policies of the adopted Meyers Area Plan.

130.26.020 Applicability

The regulations set forth in this Chapter shall apply to the Meyers Area Plan (MAP) Zone. Where applicable, the standards of this Title shall apply. Additionally, the provisions of the Tahoe Regional Planning Agency (TRPA) Code of Ordinances shall apply to all projects within the MAP Zone. Where there is a conflict with the TRPA Code of Ordinances and this Ordinance, the most restrictive standard shall apply.

130.26.030 Zone Designations

In order to differentiate the variable uses and development standards required for each area, the MAP Zone will be designated on the official zone map as follows:

A. MAP-1 Meyers Community Center District (Center)

B. MAP-2 Meyers Industrial District (Ind)

C. MAP-3 Upper Truckee Residential/Tourist District (Res/T)

D. MAP-4 Meyers Recreation District (Rec)

E. MAP-5 Upper Truckee River Corridor District (River)

130.26.040 Uses Allowed by Right or by Conditional Use Permit

A. The resource management uses of timber, wildlife/fisheries, vegetation protection and watershed improvements are allowed uses in any of the MAP zones as long as such practices are consistent with the Meyers Area Plan.

B. TRPA Code of Ordinances, Chapter 21, Section 21.4, *List of Primary Uses,* is adopted by reference for the uses listed under Table 130.26.050 (Allowed, Conditional Uses, and Prohibited Uses) below in this Chapter.

130.26.050 Matrix of Allowed Uses

Uses are allowed in the following zones subject to the requirements of this Title as designated in Table 130.26.050 (Allowed, Conditional Uses, and Prohibited Uses) below in this Section:

Table 130.26.050 – Allowed, Conditional Uses, and Prohibited Uses

Only those uses listed on the following table and otherwise noted in this Section shall be allowed by right or by Conditional Use Permit within the zones specified. The table has the following designations:

"P" Allowed use;
"CUP" Conditional Use Permit required (Section 130.52.021);
(—) Use not allowed in zone.

Table 130.26.050 – Allowed, Conditional Uses, and Prohibited Uses

USE	MAP-1 (Center)	MAP-2 (Ind)	MAP-3 (Res/T)	MAP-4 (Rec)	MAP-5 (River)
Residential					
Employee Housing	CUP(3)	—	CUP	CUP	—
Multiple Family Dwelling	P(6)	—	P	—	—
Multiple Person Dwelling (i.e., dormitories, etc.)	CUP	—	—	—	—
Nursing and Personal Care	CUP	—	—	—	—
Single Family Dwelling	P(4)(6)	—	P	—	—
Tourist Accommodation					
Time-share units	—	—	—	—	—
Bed and Breakfast Facilities	P	—	P	—	—
Hotels/Motels	CUP	—	CUP(7)	—	—
Commercial (Retail)					
Auto/Mobile Homes/Vehicle Dealers	—	CUP	—	—	—
Building Materials/Hardware	P	P	—	—	—
Eating and Drinking Places	P	P	—	—	—
Food and Beverage Sales	P	P	—	—	—
Furniture/Home Furnishings/Equipment	P	P	—	—	—
General Merchandise Stores	P	P	—	—	—
Mail Order and Vending	P	P	—	—	—

Table 130.26.050 – Allowed, Conditional Uses, and Prohibited Uses					
USE	**MAP-1 (Center)**	**MAP-2 (Ind)**	**MAP-3 (Res/T)**	**MAP-4 (Rec)**	**MAP-5 (River)**
Nursery	P	P	—	CUP	—
Outdoor Retail Sales	CUP	CUP	—	—	—
Service Stations	CUP	CUP	—	—	—
Commercial (Entertainment)					
Amusements and Recreation Services	P	—	—	CUP	—
Privately Owned Assembly and Entertainment	CUP	—	—	—	—
Outdoor Amusements	CUP	—	—	CUP	—
Commercial (Services)					
Animal Husbandry Services	CUP	P	—	—	—
Broadcasting Studios	P	P	—	—	—
Business Support Services	P	P	—	—	—
Contract Construction Services	CUP	P	—	—	—
Financial Services	P	P	—	—	—
Health Care Services	P	P	—	—	—
Personal Services	P	P	—	—	—
Professional Offices	P	P	—	—	—
Repair Services	CUP	P	—	—	—
Schools-Business and Vocational	CUP	—	—	—	—
Sales Lots	—	CUP	—	—	—
Secondary Storage	CUP(1)	CUP	—	—	—
Auto Repair and Service	CUP	P	—	—	—
Laundries and Dry Cleaning	CUP	CUP	—	—	—
Commercial (Light Industrial)					
Food and Kindred Products	CUP(6)	P	—	—	—
Fuel and Ice Dealers	—	P	—	—	—
Industrial Services	—	CUP	—	—	—
Printing and Publishing	CUP(6)	P	—	—	—
Commercial (Wholesale/Storage)					
Recycling and Scrap	—	CUP	—	—	—
Small Scale Manufacturing	CUP(6)	CUP	—	—	—
Storage Yards	—	CUP	—	—	—
Vehicle/Freight Terminals	—	CUP	—	—	—
Vehicle Storage and Parking	CUP(6)	P	—	—	—
Warehousing	CUP(6)	P	—	—	—
Wholesale and Distribution	CUP(6)	P	—	—	—
Public Services (General)					
Churches	P	—	CUP	—	—
Collections Stations	CUP(6)	P	—	—	—
Child Day Care Facilities and Preschools	P	CUP	CUP	CUP	—
Government Offices	P	CUP	CUP	—	—
Hospitals	CUP	—	—	—	—
Local Assembly and Entertainment	P	CUP	CUP	P	—
Local Post Office	P	—	—	—	—
Local Public Health and Safety Facilities	P	P	CUP	CUP	CUP
Membership Organizations	P	—	—	—	—
Publicly Owned Assembly and Entertainment	CUP	—	—	CUP	—
Public Utility Centers	CUP(6)	CUP	—	CUP	CUP

Table 130.26.050 – Allowed, Conditional Uses, and Prohibited Uses					
USE	**MAP-1 (Center)**	**MAP-2 (Ind)**	**MAP-3 (Res/T)**	**MAP-4 (Rec)**	**MAP-5 (River)**
Regional Public Health and Safety Facilities	CUP	CUP	—	—	—
Social Service Organizations	P	CUP	CUP	—	—
Schools (K-12)	CUP	—	—	—	—
Cultural Facilities	P	CUP	P	P	—
Schools/Colleges	CUP	—	—	—	—
Public Service (Linear Facilities)					
Pipelines and Power Transmission	CUP	CUP	CUP	CUP	CUP
Transit Stations and Terminals	P	P	CUP	CUP	CUP
Transportation Routes	CUP(5)	CUP(5)	CUP(5)	CUP(5)	CUP(5)
Transmission and Receiving Facilities	CUP	CUP	CUP	CUP	CUP
Recreation					
Cross Country Ski Courses	P	P	P	P	P
Day Use Areas	P	—	P	P	P
Golf Courses	—	—	—	CUP	—
Group Facilities	CUP	—	CUP	P	—
Outdoor Recreation Concessions	P	CUP	CUP	P	—
Participant Sport Facilities	CUP	CUP	—	P	—
Recreation Centers	P	—	CUP	CUP	—
Riding and Hiking Trails	P	P	P	P	P
Rural Sports	—	CUP	CUP	P	CUP
Snowmobile Courses	—	—	—	CUP	—
Sport Assembly	CUP	—	—	—	—
Visitor Information Center	P	—	CUP	P	—
Developed Campgrounds	—	—	—	P	CUP
Undeveloped Campgrounds	—	—	—	P	CUP
Recreational Vehicle Parks	—	—	—	CUP	—

(1) Applies only to parcels on Santa Fe Road.
(2) Maintenance facilities not allowed within any new transit facilities.
(3) One employee housing unit allowed without a CUP per commercial building with at least 1000 sq. ft. of CFA.
(4) Single family dwellings in Meyers Community Center limited to condominiums or townhouses with at least 3 attached units.
(5) Non-motorized public trails are a permitted use.
(6) These uses are not allowed within the portion of the ground floor of a structure that faces the primary entry point for projects adjacent to US 50. This restriction may be waived if the Meyers Advisory Council and the Planning Commission find that the use is otherwise consistent with the intent of the Meyers Area Plan.
(7) Hotels/motels are only allowed in the Town Center portion of MAP-3.

130.26.060 Development Standards

A. The following provisions shall apply in all MAP zones unless a variance is obtained in compliance with Section 130.52.070 (Variance) in Article 5 (Planning Permit Processing) of this Title, or a modification is approved by the Advisory Committee for the front yard setback as further described herein.

The following table (Table 130.26.060 – Meyers Area Plan Development Standards) sets forth the applicable lot area, lot width and setback requirements for each MAP zone. Land coverage, building height, development density, and sign standards are further regulated under the TRPA Code of Ordinances and Attachment A of the Meyers Area Plan.

Table 130.26.060 – Meyers Area Plan Development Standards

		MAP-1 (Center)[6]	MAP-2 (Ind)	MAP-3 (Res/T)	MAP-4 (Rec)	MAP-5 (River)
Maximum Height and Density for All Uses	Maximum Height (Ft.)[8]	42	TRPA Code Chapter 37	42, TRPA Code Sec. 37.4[9]	TRPA Code Sec. 37.4	TRPA Code Sec. 37.4
	Density, Single Family Residential	NA	NA	1 unit/ parcel (parcels less than 1 acre); 2 units if greater than one acre	NA	NA
	Density, Multiple Family[4]	20 units/ acre	NA	15 units/ acre	NA	NA
	Density, Multi-person/ Nursing & personal care	25 persons/ acre	NA	NA	NA	NA
	Density, Bed and Breakfast	10 units/ acre	NA	10 units/acre	NA	NA
	Density, all other Tourist accommodation	30 units/ acre	NA	30 units/ acre [7]	NA	NA
	Density, Group facilities	25 persons/ acre	NA	25 persons/ acre	25 persons/ acre	NA
	Density, Campgrounds & Recreational Vehicle Parks	NA	NA	NA	8 sites/ acre for camp-grounds, 10 sites/ acre for RV Parks	8 sites/ acre for camp grounds
Setbacks and Lot Sizes for All Non-residential Uses	Minimum Lot Size (Sq. Ft.)	5,000	10,000	5,000	NA	NA
	Minimum Lot Frontage (Ft.)	50	100	50	NA	NA
	Front Setback (Ft.)	20[3]	20[1]	20[1]	20[1]	20
	Side Setback (Ft.)	0	0	0	0	0
	Rear (Ft.)	0	10	0	0	0
	Setback Adjacent to residential (Ft.)	25	25	25	25	0

Table 130.26.060 – Meyers Area Plan Development Standards

		MAP-1 (Center) [6]	MAP-2 (Ind)	MAP-3 (Res/T)	MAP-4 (Rec)	MAP-5 (River)
Setbacks and Lot Sizes for All Residential Uses	Minimum Lot Size (Sq. Ft.)	6,000	NA	6,000	NA	NA
	Minimum Lot Frontage (Ft.)	60	NA	60	NA	NA
	Front Setback (Ft.)	20[3]	NA	20[2]	NA	NA
	Side Setback (Ft.)	5	NA	5	NA	NA
	Rear Setback (Ft.)	15	NA	15	NA	NA
Maximum Transferred Land Coverage (see TRPA Code Sec. 30.4 for additional detail)		70% of high capability land	See TRPA Code Ch. 30	70% of high capability in Town Center overlay; see TRPA Code Ch. 30 for outside of Town Center [5]	70% of high capability in Town Center overlay; see TRPA Code Ch. 30 for outside of Town Center	See TRPA Code Ch. 30

[1] The front setback may be reduced as part of the design review when such reduction supports the policies of the Meyers Area Plan and does not reduce the numerical scenic rating of the roadway unit.

[2] Second story cantilever living space not more than 4 feet into front yard.

[3] For parcels adjacent to the US 50 ROW in MAP-1 the minimum front setback can be reduced to 1 ft. from property line if the resulting setback is a minimum of 70 ft. from the centerline of US 50 and 35 feet from the centerline of the Pat Lowe multi-use trail.

[4] Multiple family density applies to apartments, condominiums, and townhomes.

[5] Detached single family dwellings limited to no more than 30% coverage per TRPA Code Sec. 30.4.

[6] The maximum density for parcels in the Meyers Community Center Zoning District proposed for a mixture of land uses shall be calculated as a proportional share of the maximum densities used for different project land uses. These densities shall be combined together and rounded to the next lowest whole number. For example, if a 3 acre parcel proposes that 2 acres be used primarily for multiple family (20 units/acre) and 1 acre be used primarily for tourist accommodation other than bed and breakfast (30 units/acre), then the maximum density allowed for the project would be 30 tourist accommodation units and 40 multiple family units.

[7] Hotels/motels are only allowed in the Town Center portion of the MAP-3 Zoning District.

[8] For building height above the maximum height of 26 feet, the findings in TRPA Code Sec. 37.7 shall apply.

[9] A maximum building height of 42 feet is only allowed in the Town Center portion of the MAP-3 Zoning District. For building height above the maximum height of 26 feet, the findings in TRPA Code Sec. 37.7 shall apply.

B. Any new development, additions to existing development, change in use, or exterior modifications to existing development shall be subject to a Design Review Permit in compliance with Section 130.52.030 (Design Review Permit) in Article 5 (Planning Permit Processing) of this Title.

CHAPTER 130.27 — COMBINING ZONES

Sections:

130.27.010 Combining Zones Established; Applicability
130.27.020 *Reserved*
130.27.030 Avalanche Hazard (-AV) - *Reserved*
130.27.040 Dam Failure Inundation (-DFI)
130.27.050 Design Review - Community (-DC)
130.27.060 Design Review - Historic (-DH)
130.27.070 Design Review - Scenic Corridor (-DS)
130.27.080 *Reserved*
130.27.090 Manufactured/Mobile Home Park (-MP)
130.27.100 Airport Noise and Safety Contour (-ANS)
130.27.110 *Reserved*
130.27.120 Tahoe Basin (-T)

130.27.010 Combining Zones Established; Applicability

A. The Combining Zones described in this Chapter are established to implement provisions of the General Plan, to regulate certain uses, provide for innovative design solutions, and to protect the public health and safety from natural and man-made hazards.

B. **Applicability.** The Combining Zones identified in this Chapter apply to development and uses in addition to all other applicable requirements of this Title, including the requirements of the base zone. In the event of a conflict between the provisions of this Chapter and any other provision of this Title, the more restrictive provision shall apply.

1. **Mapping of Combining Zones.** The combining zone is shown by the combining zone symbol being appended as a suffix to the symbol for the base zone. The combining zones are applied to property through the zone change process in compliance with Chapter 130.63 (Amendments and Zone Changes) in Article 6 (Zoning Ordinance Administration) in this Title and to any specific rezoning requirements of the applicable combining zone.

2. **Allowed Uses, Permit Requirements, Development Standards.** Except as may be otherwise provided by this Chapter for a specific combining zone:

a. Any use normally allowed in the base zone by this Chapter may be allowed within a combining zone, subject to any additional requirements of the combining zone;

b. Development and uses within a combining zone are subject to the development permits required by this Chapter for the base zone and the combining zone, as applicable, except where a proposed use requires a similar permit but with a different level of review (Administrative Permit versus Conditional Use Permit), in which case the more stringent permit requirements shall apply; and

c. Development and uses within a combining zone shall comply with all applicable development standards of the base zone and the combining zone, except as modified by this Chapter.

130.27.020 *Reserved*

130.27.030 Avalanche Hazard (-AV) Combining Zone - *Reserved*

130.27.040 Dam Failure Inundation (-DFI) Combining Zone

A. **Combining Zone Established.** This Section implements General Plan Policy 6.4.2.1 (Dam Failure Inundation) to advise of the potential hazard in the event of dam failure and to protect public health and safety by establishing regulations that minimize public exposure to such hazards. Nothing in this Section is intended to preclude the development of any lot.

B. **Applicability.** The Dam Failure Inundation (-DFI) Combining Zone shall be combined with existing base zones and shall be designated by the Board on the zone maps. The designation shall apply to lands that are located within identified areas susceptible to flooding in the event of the failure or collapse of a dam within the following jurisdictions:

1. State Department of Water Resources Division of Dam Safety, which the California Office of Emergency Services has determined poses a risk of injury or loss of life in the event of failure or collapse; or

2. Federally-controlled dams not under state jurisdiction.

C. **Uses Prohibited.** The following critical or high occupancy uses or structures shall not be located within a Dam Failure Inundation Combining Zone:

1. Schools.
2. Churches and other places of assembly.
3. Child day care facilities.
4. Mobile home parks.
5. Community care facilities.
6. Hospitals.

130.27.050 Design Review - Community (-DC) Combining Zone

A. Combining Zone Established. This Section implements the General Plan by establishing a Design Review – Community (–DC) Combining Zone which includes standards and site review procedures.

B. **Applicability.** This Section shall apply to all areas designated Design Review-Community Combining Zone (-DC) that are adjacent to or visible from designated State Scenic Highway corridors or located within community design review areas established by the Board. Prior to the application of the (–DC) Combining Zone design guidelines and standards shall be adopted by the Board.

The requirements of this Section shall be combined with the provisions of the base zone as designated on the zoning map.

C. Design Review Permit Application. Prior to development of any multi-unit residential, commercial, mixed-use, or industrial zoned property within a (-DC) Combining Zone, a Design Review Permit application shall be processed in compliance with Section 130.52.030 (Design Review Permit) in Article 5 (Planning Permit Processing) of this Title.

1. The requirements for a Design Review permit as set forth by this Subsection are in addition to, and not a substitute for, the requirements pertaining to building permits.

2. If the development requires a discretionary permit, such as a Conditional Use or Development Plan Permit, said discretionary permit will satisfy the Design Review Permit requirement.

D. **Exemptions.** With the exception of the Meyers Area Plan Design Review Area (See Subsection E, Meyers Area Plan Design Review Exemptions and Requirements, below in this Section), the following structures shall be exempt from the design review process required in this Section, but must still comply with all other applicable provisions of this Title and adopted community design guidelines and standards:

1. Structures and site development within a research and development zone that is combined with a (-DC) designation, if said base zone has been expanded to include architectural style and site design requirements which are more specific in nature and satisfy the intent of the design review concept;

2. Wall signs;

3. Change in text on existing signs;

4. Internal changes within an existing structure, including changes in the use of the existing structure, where no external changes or alterations are proposed;

5. Minor additions to existing structures wherein the total floor area increase is 10percent or less, and where compliance to the appearance of the existing structure is demonstrated, providing the existing structure has been reviewed and approved under a previous Design Review Permit or other discretionary application;

6. Fencing;

7. Detached single-unit residences and accessory structures;

8. Structures accessory to temporary uses in compliance with Section 130.52.060 (Temporary Use Permit); and

9. Modifications to bring a structure into conformance with the Americans with Disabilities Act.

E. **Meyers Area Plan Design Review Exemptions and Requirements.**

1. Any new development or additions and modifications to existing development on properties designated (-DC) on the Zoning Map within the Meyers Area Plan, shall be processed as a Design Review Permit. All design review applications shall be subject to applicable zone provisions and to the Meyers Area Plan Design Guidelines as noted within Appendix A of the Meyers Area Plan. The following activities, however, are exempt from the design review process:

    a. Internal changes within an existing structure where no external changes or alterations are proposed;

    b. Change in text on existing signs;

    c. Those activities listed as being "exempt" or "qualified exempt" in Chapter 2 of the TRPA Code of Ordinances;

    d. Modifications to bring a structure into conformance with the Americans with Disabilities Act;

    e. Fencing six feet or less in height if not located in a front yard setback.

2. The following minor use permit applications are also exempt from the procedures provided in this Subsection, but are subject to applicable zone regulations and the Design Guidelines as noted in Attachment A of the Meyers Area Plan, and shall be reviewed and approved, conditionally approved, or denied by the Department based on those provisions:

    a. Wall signs;

    b. Internal changes within an existing structure where such changes require additional parking;

    c. Fencing greater than six feet in height;

    d. Freestanding and monument signs;

    e. Minor increases to existing floor area that do not exceed five percent of the existing floor area or 500 square feet, whichever is less; and

    f. Those projects which are located within a (-DC) Combining Zone but are located on lots which do not have frontage on either U.S. Highway 50 or State Route 89, or are so situated on the site that the project will not be visible from either highway.

3. All activities subject to this Subsection, which are not exempt as noted therein, shall be processed as a Design Review Permit in compliance with this Section. The Department shall review the application for compliance with the Design Guidelines for Meyers Area Plan and applicable zone regulations, and shall forward recommendations to the Commission. The Commission shall approve, conditionally approve, or deny the application based on the Design Guidelines and applicable zone regulations.

F. **Establishment of Community Design Review Areas; Guidelines and Standards.**

1. The Board, following consideration by the Commission, may establish new community design review areas upon making the following findings:

    a. It is the desire of the majority of residents in the affected community to impose such guidelines and standards; and

    b. The establishment of a community design review area would enhance the character of the community by establishing a community identity that would protect property values while promoting economic development.

2. Upon creation of a new community design review area, the Board shall adopt by resolution the boundaries of the area, shall designate the members of the

design review committee, and delineate the procedural requirements for design review in the community for which it is adopted.

3. The following procedures shall be followed in adopting community design guidelines and standards for both existing and newly created design review areas:

   a. The design review committee designated by the Board, whether an advisory committee, community service district, or some other entity recognized by the County, shall draft a document containing design guidelines and standards based on their establishment of a community identity through public outreach and consensus, and shall submit said draft to the Director. The design guidelines and standards shall be objective and measurable, rather than subjective and vague.

   b. The Director shall review the draft community design guidelines and standards, and provide comments as to its consistency with the standards and findings provided in this Section, as well as its overall utility and effectiveness. The draft community design guidelines and standards shall be revised by the Department to incorporate those comments.

   c. The Commission shall hold a hearing to review the draft community design guidelines and standards and shall transmit its action to the Board in the form of a written recommendation.

   d. The Board shall hold a hearing to review and adopt the community design guidelines and standards.

      (1) This hearing may be held in conjunction with the adoption of the respective community design review area.
      (2) The manner of adoption of the community design guidelines and standards (i.e., by ordinance or resolution) shall be at the discretion of the Board.

   e. Adoption of the community design guidelines and standards constitutes a directive to the Department for its use in reviewing projects located in the specific community design review area. However, adoption does not constitute a granting of any authority to any local design review committee not otherwise granted formal authority by the Board in compliance with Section 130.60.070 (Design Review Committee) in Article 6 (Zoning Ordinance Administration) of this Title.

4. Until such time as new design guidelines and standards are adopted in compliance with Subsection F.3 (Establishment of Community Design

Review Areas; Guidelines and Standards) above in this Section, design review of projects located within a community design review area shall utilize the guidelines set forth in the Community or Historic Design Guides where applicable, adopted by the Board on April 13, 1982 and reformatted on April 24, 2018 (Resolutions No. 071-2018 and 072-2018, respectively). Projects located within the Missouri Flat Road Corridor shall utilize the guidelines set forth in the Missouri Flat Design Guidelines adopted by the Board on June 3, 2008 and reformatted on April 24, 2018 (Resolution No. 074-2018). Projects located in the Pollock Pines design review area shall utilize the guidelines set forth in the Sierra Design Guide, adopted by the Board on October 26, 1982 and reformatted on April 24, 2018 (Resolution No. 073-2018).

130.27.060 Design Review - Historic (–DH) Combining Zone

A. **Combining Zone Established.** This Section establishes a Design Review – Historic (–DH) Combining Zone to identify and protect historic structures, sites, and districts, and establishes procedures and regulations for the review of projects that may affect such resources.

B. **Designation of Design Review - Historic (–DH) Combining Zone.**

1. Following consideration by the Commission, the Board may designate a (–DH) Combining Zone upon determining that it is consistent with General Plan Objective 7.5.2 (Maintenance of the Visual Integrity of Historic Resources).

2. The boundaries of each (–DH) zone shall be specifically identified at the time of its creation. Said boundaries may be amended by a zone change in compliance with Chapter 130.63 (Amendments and Zone Changes) in Article 6 (Zoning Ordinance Administration) of this Title.

C. **Development Requirements within (–DH) Combining Zone.**

1. Development on multi-unit residential, commercial, or industrial zoned property within the (–DH) Combining Zone shall be reviewed for consistency with standards adopted under Subsection 130.52.030.C (Design Review Committee) in Article 5 (Planning Permit Processing) of this Title. If the development requires another discretionary permit, such as a Conditional Use or Development Plan Permit, said discretionary permit will satisfy the Design Review Permit requirement. For discretionary projects requiring public hearing, staff shall make a recommendation to the review authority based on the determination of consistency.

2. Prior to issuance of a building permit for single-unit residential development, consistency with design and development standards under Subsection D (Adoption of Historic Design Guidelines) below in this Section shall be

determined by Administrative Permit (Section 130.52.010, Administrative Permit, Relief, or Waiver) in Article 5 (Planning Permit Processing) of this Title, subject to the guidelines and standards adopted for the specific (–DH) Combining Zone in which the development is located.

D. **Adoption of Historic Design Guidelines.** The Board shall adopt, by resolution, guidelines and standards that shall delineate the requirements for design review within each historic district. Until such time as design guidelines and standards are adopted, the Historic Design Guides adopted by the Board on April 13, 1982, and reformatted on April 24, 2018 (Resolution No. 072-2018), shall be applied.

130.27.070 Design Review — Scenic Corridor (-DS) Combining Zone *Reserved*

130.27.080 *Reserved*

130.27.090 Mobile/Manufactured Home Parks (-MP) Combining Zone

A. **Combining Zone Established.** The Mobile/Manufactured Home Park (-MP) Combining Zone is established to provide consistent standards for mobile/manufactured home parks, hereinafter referred to as "mobile home park(s)".

B. **Applicability.** The following standards shall apply to new mobile home parks or proposed revisions to an existing mobile home park, where allowed in the use matrices for the zones.

C. **Compliance with State Law.** All mobile home parks shall comply with the minimum standards of the Mobile Home Parks Act (Health and Safety Code 18200 et seq.) and the applicable Mobile Home Parks Regulations adopted by the Department of Housing and Community Development (Code of Regulations, Title 25) to include, but not be limited to lot size and setback standards, infrastructure requirements, operations, maintenance, and inspections within a mobile home park.

D. **Development Standards**. New mobile home parks shall comply with the standards found in the adopted Mobile Home Park Design Standards (Resolution 200-2015).

130.27.100 Airport Noise and Safety Contour (-ANS)

A. **Purpose.** This chapter establishes regulations to assure that the creation or establishment of structures or objects of natural growth will not constitute hazards to air navigation; to minimize public exposure to airport related hazards; and to assure the compatibility of permitted development with anticipated airport noise levels

consistent with the El Dorado County Airport Land Use Compatibility Plan (ALUCP).

B. **Applicability**. These regulations shall be combined with existing principal zone districts and shall apply to areas designated Airport Noise and Safety Contour (-ANS) on the zoning maps that coincide~~s~~ with the Airport Influence Area (AIA) as identified in the ALUCP for the Cameron Airpark, Georgetown, and Placerville airports. All land uses and development standards of the principal zone shall apply in the combined zone except in so far as they are inconsistent with or modified by the land uses and development standards set forth in the ALUCP. Parcels or portions of parcels that are not located within the AIA as identified in the ALUCP are not subject to the Airport Noise and Safety Contour (-ANS) regulations.

C. **Definitions**.

The following words, terms and phrases, when used in this chapter, shall have the meanings ascribed to them in this section, except where the context clearly indicates a different meaning:

"Airport" means an area of land or water that is used or intended to be used for the landing and taking off of aircraft and includes its buildings and facilities, if any (Federal Aviation Regulations [FAR], Section 1.1, General Definitions). Airports include the Cameron Airpark Airport, Georgetown Airport, Placerville Airport, or any new public-use or military airport that may be created within the western El Dorado County area under the jurisdiction of the El Dorado County Airport Land Use Commission.

Airport hazard" means any structure or natural growth that obstructs the navigable air space.

"Airport Influence Area (AIA)" means an area in which current or future airport-related noise, overflight, safety, or airspace protection factors may significantly affect land uses or necessitate restrictions on those uses. The AIA constitutes the area within which certain land use actions are subject to ALUC review to determine consistency with the policies herein.

"Airport Land Use Commission (ALUC)" means a commission authorized under the provisions of California Public Utilities Code, Section 21670 et seq. and established (in any county within which a public-use airport is located) for the purpose of promoting compatibility between airports and the land uses surrounding them. The El Dorado County Transportation Commission, or a legally established successor agency, acts as the Airport Land Use Commission for El Dorado County.

"Airport Land Use Compatibility Plan (ALUCP)" means a planning document that contains policies for promoting safety and compatibility between public use airports and the communities that surround them. The ALUCP is the foundation of

the airport land use compatibility planning process. It is adopted by the ALUC and reflects the ALUCs jurisdictional boundary.

"Avigation Easement" means an easement that conveys rights associated with the aircraft overflight of a property and establishes restrictions on use of the underlying property.

"**Imaginary surfaces**" means surfaces established in relation to the end of each runway or designated takeoff and landing area, as defined in paragraphs 77.25, 77.28 and 77.29 of the Federal Aviation Regulations (FAR) Part 77. Such surfaces include imaginary approach, horizontal, conical, transitional, primary and other surfaces. These surfaces are specifically described for each airport in the airport comprehensive land use plan and shall be calculated based upon the established airport elevation. The established elevation of an airport shall be the highest point of the usable land area.

D. **Land Use Compatibility**. New development, development approval or any expansion of existing uses shall be consistent with the criteria of the land use compatibility guidelines contained in the ALUCP. Notwithstanding the restrictions for the location of a single-family residence within the AIA, the construction of a new single family residence on a lawfully created parcel, when appropriately zoned, may be permitted in accordance with height restrictions, and noise attenuation requirements of the ALUCP.

In interpreting and applying the land use compatibility guidelines, the land use criteria are the minimum requirements for the promotion of the public health, safety and general welfare. If an ambiguity arises concerning the content or application of the guidelines, the El Dorado County Airport Land Use Commission shall ascertain all relevant facts, consider the ambiguity, and interpret and apply the guidelines.

E. **Exceptions.** The land use compatibility guidelines and the provisions of Subsection130.27.100.D (Land Use Compatibility) above in this Chapter shall not apply to the following:

1. **Temporary uses.** Temporary uses, including, but not limited to: carnival, air show, or other outdoor entertainment events; provided, that the airport is temporarily closed for general aviation purposes;

2. **Overruling ALUC Determination.** If the Planning Commission wishes to proceed with a proposed action, regulation, permit, or project that the ALUC has determined to be inconsistent with the ALUCP, the Planning Commission must overrule the ALUC determination. To do so, the Planning Commission must make the findings and follow the notification and voting requirements specified in state law (California Public Utilities Code Sections 21676 and 21676.5).

F. **Development Requirements**. Development requirements are set forth in the ALUCP.

G. **Administration**. No building permit or development permit or other entitlement for use shall be issued by the County for any development or activity within areas designated (-ANS) on the zoning map until such development or activity has been reviewed and found to be in compliance with the ALUCP.

H. **Supplemental application information**. An application for a building or development permit or other entitlement for use shall include information and any maps, drawings or other information as may be required by the ALUCP.

I. **Airport Land Use Commission Review.** No discretionary permit of any type shall be approved for development or activity within the AIA until the County has forwarded the application to the Airport Land Use Commission responsible for the administration of the ALUCP for review as to consistency with the plan and the County has received any recommended conditions or restrictions in order to ensure the public health, safety and general welfare, including but not limited to the requirement for filing of an avigation easement dedication, in compliance with Section 4.6.1 of the ALUCP.

130.27.110 *Reserved*

130.27.120 Tahoe Basin (-T) Combining Zone

A. **Combining Zone Established.** The Tahoe Basin (-T) Combining Zone identifies lands under the jurisdiction of both the County and the Tahoe Regional Planning Agency (TRPA), and provides for the coordination of planning and permitting activities between both agencies.

B. **Applicability.** The Tahoe Basin (-T) Combining Zone shall apply to all lands within the Lake Tahoe drainage basin, except for those zoned Meyers Area Plan (MAP).

C. **Development Review.** In addition to the standards required under the base zone, all use and development shall be subject to any additional permitting requirements, development standards, and regulations adopted by the TRPA Plan Area Statement and other TRPA regulations, as amended from time to time.

D. **Development Standards.** The following development standards in Table 130.27.120.A (Tahoe Basin Combining Zone Development Standards) below in this Section shall supersede the development standards of the base zone for all lots within the (-T) Combining Zone. Where a dash (—) is designated, the standard shall comply with the base zone.

Table 130.27.120.A – Tahoe Basin Combining Zone Development Standards

Development Attribute	RM	R1	R1A	RE	TPZ	CC	I
Min. Lot Width	60 ft, only	—	—	—	—	—	—
Setbacks	2nd floor cantilevered living space can extend 4 ft into the front yard. No zero lot lines for common walls.	2nd floor cantilevered living space can extend 4 ft into the front yard.	Residential: Front = 20ft Side = 10ft Rear = 30ft 2nd floor cantilevered living space can extend 4 ft into the front yard.	Residential: Front = 20ft Side = 10ft Rear = 30ft	—	—	—
Parking[1]		Requirements under Table 130.35.030.1 (Schedule of Off-Street Vehicle Parking Requirements) in Article 3 (Site Planning and Project Design Standards) of this Title may be in tandem.					
Lot Coverage	Subject to: Bailey Use Scoring System (Development prior to 7/1/87); or Individual Parcel Evaluating System (IPES)						
Max. Height	25 feet at natural grade. Additional height subject to: TRPA Code of Ordinances, Chapter 37						

NOTES:
[1] Subject to Chapter 130.35 (Parking and Loading) in Article 3 (Site Planning and Project Design Standards) of this Title, except where noted.

CHAPTER 130.28 — PLANNED DEVELOPMENT (-PD) COMBINING ZONE

Sections:

130.28.010 Planned Development (–PD) Combining Zone Established
130.28.020 Applicability
130.28.030 Combination with Other Zones
130.28.040 Zone Change and Development Plan Requirements
130.28.050 Residential Development Requirements
130.28.060 Residential Density Bonuses for On-site Open Space
130.28.070 Condominium Conversions

130.28.010 Planned Development (–PD) Combining Zone Established

The Planned Development (–PD) Combining Zone implements the General Plan by providing innovative planning and development techniques that allow the use of flexible development standards; provide for a combination of different land uses which are complimentary, but may not in all aspects conform to the existing zoning regulations; allow clustering of intensive land uses to minimize impacts on various natural resources; avoid cultural resources where feasible; promote more efficient utilization of land; reflect the character, identity and scale of local communities; protect suitable land for agricultural uses; and minimize use compatibility issues and environmental impacts.

130.28.020 Applicability

The provisions of this Chapter shall apply to the following:

A. Lands zoned or required by the General Plan to be zoned with the Planned Development (–PD) Combining Zone.

B. All newly constructed residential and non-residential condominium projects when design standards and Condominium Plans are not available, in compliance with Section 130.28.070 (Condominium Conversions) below in this Chapter.

130.28.030 Combination with Other Zones

A. The (–PD) Combining Zone may only be added to a base zone through a zone change application in compliance with Chapter 130.63 (Amendments and Zone Changes) in Article 6 (Zoning Ordinance Administration) of this Title.

B. Residential development density shall be that allowed in the base zone, except as provided in Section 130.28.060 (Residential Density Bonuses for On-site Open Space) below in this Chapter and Chapter 130.31 (Affordable Housing Requirements

and Incentives) in Article 3 (Site Planning and Project Design Standards) of this Title. Where the base zone is designated as open space, the density shall be calculated based on the maximum density allowed under the General Plan land use designation.

C. Allowed uses of a Development Plan shall only be those allowed in the base zone, as provided in Chapters 130.21 (Agricultural, Rural, and Resources Zones) through 130.25 (Special Purpose Zones) above in this Article, except for common area recreational facilities and similar uses.

130.28.040 Zone Change and Development Plan Requirements

A. A Development Plan Permit application may be submitted with a zone change application to add the (–PD) Combining Zone, in which case the applications shall be processed concurrently in compliance with Section 130.52.040 (Development Plan Permit) in Article 5 (Planning Permit Processing) of this Title and Chapter 130.63 (Amendments and Zone Changes) in Article 6 (Zoning Ordinance Administration) of this Title. The review authority shall consider the zone change and development plan applications on their own merits and may consider approval of the zone change without approving the development plan.

B. No use shall be allowed on lands zoned with the (–PD) Combining Zone unless a Development Plan Permit is approved by the Commission or Board. All subsequent permits for building, grading, or other development approvals must be found consistent with the approved Development Plan Permit.

130.28.050 Residential Development Requirements

All residential development projects in the (–PD) Combining Zone shall be subject to the following:

A. **Open Space.** Except as provided in Section 130.28.050.B (Exemptions and Alternatives to the Onsite Open Space Requirement), below in this Section, 30 percent of the total site shall be set aside for open space that is commonly owned or publicly dedicated. Commonly owned open space, as defined in Article 8 (Glossary: See "Open Space: Common") of this Title shall not include space occupied by infrastructure such as roads, parking lots, or above ground components of sewer and water treatment plants, or area set aside for the sole use of individual residents, such as private balconies and patios. Commonly owned Open Space may include land developed or set aside for:

1. Recreational purposes, such as parks, ball fields, golf courses, or picnic areas;

2. Passive purposes, such as gathering places, community gardens and landscaped areas;

3. Aesthetic purposes, such as naturally scenic areas;

4. Protection of agricultural or natural resources;

5. Pedestrian circulation, in compliance with Subsection D (Pedestrian Circulation) below in this Section; or

6. Natural or man-made lakes, ponds and other water features, which are included in the calculation of open space, but excluded from the calculation of base units and bonus density.

B. **Exemptions and Alternatives to the Onsite Open Space Requirement.** To facilitate and encourage development of higher density housing types, including those serving moderate and lower income households, exemptions and alternatives to the 30 percent onsite open space requirement are identified below.

1. **Exempt Projects.** The following projects are exempt from the open space requirement:

   a. Residential planned developments consisting of five or fewer lots or units;

   b. Condominium conversions;

   c. Projects within Community Regions or Rural Centers on existing sites three acres or less in size;

   d. Residential Multi-Family (RM) zoned projects or the residential component of Mixed Use Developments.

2. **Alternatives for Improved Open Space.** The common open space requirement may be reduced to 15 percent of the total site for Planned Developments in the R1 and R20K zones, where:

   a. The common open space is improved for active recreational uses, including but not limited to swimming pools, sport courts or sport fields, tot lots, clubhouse or meeting room facilities, and community gardens, or for passive recreational uses such as landscaped buffers or greenbelts; and

   b. In addition to the common open space, additional area equal to 15 percent of the total site is devoted to open space areas reserved for the exclusive use of individual residents, such as private yards and patios.

3. **Open Space requirements for Planned Developments within Agricultural Districts.** In order to conserve and promote agricultural activities and uses

within the County, planned developments within Agricultural Districts may set aside open space for agricultural uses. The resulting agricultural area reserved for open space may be used for any allowed agricultural use, include raising and grazing of animals, orchards, vineyards, community gardens and crop lands. The minimum size of the clustered residential lots in a planned development within an Agricultural District shall be not less than 20 acres.

C. **Clustering.** Residential lots shall be clustered , where feasible, to promote integrated site design that considers natural features of the site, creates more area for open space and recreation, avoids cultural resources, minimizes aesthetic impacts, maintains opportunities for commercial grazing, and minimizes loss of important agricultural lands.

D. **Pedestrian Circulation.** Pedestrian connections shall be provided to allow internal circulation for the residents of the development to access surrounding commercial, recreational, residential, and civic uses, or on-site open space areas. Said connections can be counted toward the open space requirement in Subsection A (Open Space) above in this Section.

130.28.060 Residential Density Bonuses for On-site Open Space Dedication

Density bonuses may be earned where a new minimum of 30 percent of the land area within a residential development project is set aside for commonly owned or publicly dedicated open space, as defined in Article 8 (Glossary: See "Open Space: Public") of this Title.

A. The amount of bonus units earned shall be based on the amount of developable land within the open space. For purposes of this Section, "developable land" excludes the following:

1. Lakes, rivers, and perennial streams.

2. Areas encumbered by road and/or public utility improvements.

B. The number of base units for the project shall be based on the amount of gross acreage, excluding water bodies, and the maximum density provided by the existing or proposed zones. Base units may be based on proposed zoning if the proposed zoning is approved concurrently with the project. Where the existing or proposed zone is Open Space (OS), density calculation shall be based on the maximum density allowed by the General Plan land use designation.

C. **Calculating Total Project Density with a Density Bonus.** The formula for calculating base units, bonus units, and total project density is as follows:

1. Base units are calculated by subtracting the area of lakes, rivers, and perennial streams from the gross acreage and multiplying the difference by the

maximum density allowed in the zone(s). Where there is more than one zone, total base units shall be the sum of each zone calculation.

2. Bonus units are calculated by multiplying the acreage of developable land set aside as open space by 1.5 times the density allowed in its existing or proposed zone(s). Where there is more than one zone, total bonus units shall be the sum of each zone calculation. Where the existing or proposed zone is Open Space (OS), the density bonus calculation shall be based on the maximum density allowed by the General Plan land use designation.

3. Fractions of base units and bonus units resulting from the calculations above shall be rounded down to the next whole number.

4. Total maximum project density is the sum of the total base units and total density bonus units.

D. **Density Bonus for Affordable Housing.** The open space density bonus provided under this Section is in addition to any bonus that may be applicable in compliance with Chapter 130.31 (Affordable Housing Density Bonus) in Article 3 (Site Planning and Project Design Standards) of this Title.

130.28.070 Condominium Conversions

Condominium conversions shall meet the following requirements:

A. Conformance with all applicable standards of Chapter 110.16 (Uniform Building Code) of Title 110 (Buildings and Construction) in the County Code of Ordinances;

B. All private streets, driveways, walkways, parking areas, landscaped areas, storage areas, utilities, open space, recreational facilities, drainage facilities, and other infrastructure and improvements not dedicated to a public entity shall be maintained by the property owners and incorporated in the Covenants, Conditions & Restrictions (CC&Rs) for the project;

C. The units shall be individually metered or provisions contained in the CC&Rs to provide for a single meter billed to the property owners' association;

D. Applications for conversion of multi-unit residential dwellings shall be reviewed by the Public Housing Authority for a determination of the impact of the project on the availability of affordable housing stock and a recommendation on options for preserving said housing stock;

E. Multi-unit residential dwellings shall not be converted to a condominium, stock cooperative, or timeshare until the following time periods have expired:

1. 10 years from the date of issuance of the certificate of occupancy for the affected building that was not income restricted; or

2. 20 years from the date of issuance of the certificate of occupancy for building(s) for which density bonuses were granted in compliance with Chapter 130.31 (Affordable Housing Requirements and Incentives), or that contain any units restricted to households earning 120 percent or less of the area median family income.

F. Notice to the California Department of Housing and Community Development and the existing tenants shall be provided, in compliance with California Government Code Section 66427.1, at least two years prior to the conversion of any affordable residential housing units which met any of the following criteria at the time of construction:

1. The units were built with the aid of government funding;

2. The project was granted an affordable housing density bonus in compliance with Chapter 130.31 (Affordable Housing Density Bonus) in Article 3 (Site Planning and Project Design Standards) of this Title; or

3. The project received other incentives based on the inclusion of affordable housing.

CHAPTER 130.29 — MINERAL RESOURCE (-MR) COMBINING ZONE: EXPLORATION, MINING, RECLAMATION, AND PROTECTION

Sections:

130.29.010 Mineral Resource (– MR) Combining Zone Established
130.29.020 Definitions
130.29.030 Applicability
130.29.040 Exemptions
130.29.050 General Requirements
130.29.060 Minimum Lot Size
130.29.070 Mineral Exploration
130.29.080 Measure A Initiative Ordinance
130.29.090 Mining and Reclamation
130.29.100 Standards for Reclamation
130.29.110 Interim Management Plans
130.29.120 Annual Report Requirements

130.29.010 Mineral Resource (–MR) Combining Zone Established

The County recognizes that the extraction of minerals is essential to the continued economic well-being of the County and to the needs of society, and that the reclamation of mined lands is necessary to prevent or minimize adverse effects on the environment and to protect the public health and safety. The County also recognizes that surface mining takes place in diverse areas where the geologic, topographic, climatic, biological, and social conditions are significantly different and that reclamation projects and their operational specifications may vary accordingly. This Chapter:

A. Identifies those areas that are designated as Mineral Resource Zone 2 (MRZ 2xx) on the State Classification Reports, where the likely extraction of the resource through surface mining methods will be compatible with surrounding uses, in compliance with General Plan Policies 2.2.2.7 (Overlay Land Use Designations: Mineral Resource (-MR) and 7.2.2.2 (Protection of important mineral resources from incompatible development);

B. Provides standards and regulations that promote and ensure the continued availability and development of the County's important mineral resources;

C. Provides erosion control, groundwater protection, and otherwise protection of the environment;

D. Regulates surface mining operations as required by the State of California to ensure that mined lands are reclaimed to a usable condition that is readily adaptable for alternative uses; and

E. Protects the public health, safety, and welfare from residual hazards due to surface and sub-surface mining operations.

130.29.020 Definitions

As used within this Chapter, the terms below will mean the following:

"Mined Lands" shall mean an area in which surface mining operations will be, are being, or have been conducted, including private roads appurtenant to any such area, land excavations, workings, mining waste, groundwater resources, and areas in which structures, facilities, equipment, machines, tools, or other materials or property which result from or are used in surface mining operations are located.

"Surface Mining Operations" shall mean all, or any part of, the process involved in the mining of minerals on mined lands by removing overburden and mining directly from the mineral deposits, open-pit mining of minerals naturally exposed, mining by the auger method, dredging and quarrying, or surface work incident to an underground mine.

130.29.030 Applicability

The regulations in this Chapter shall be combined with those of the base zone and shall apply to all public and private lands within the County designated as the Mineral Resource (–MR) Combining Zone on the zoning maps. All uses and development standards of the base zone shall apply in the combining zone except when they are incompatible with or modified by the uses and development standards set forth in this Chapter. Removing the (–MR) Combining Zone from the base zone shall be considered by the County only when specific studies similar in nature to State Classification Reports prove that a significant mineral deposit no longer exists (General Plan Policy 7.2.3.12: Environmental/Land Use Compatibility).

130.29.040 Exemptions

The following activities are exempt from the requirements of this Chapter:

A. Agricultural grading permit issued by the Agriculture Department.

B. On-site and-off site excavation and grading activities under an approved grading permit or that are exempt from the requirement for a grading permit. These exempt activities may include processing of materials generated by the grading operation, including rock crushing, stockpiling, aggregate washing, screening and drying.

C. Operation of a plant site for mineral processing, including associated on-site structures, equipment, machines, tools, or other materials; and on-site stockpiling and recovery of mined materials, subject to all of the following conditions:

   1. The plant site is located on lands designated Industrial or Commercial in the General Plan.

2. The plant site is located on lands zoned for industrial or commercial use, or on land subject to an active Conditional Use Permit for mineral processing.

3. None of the minerals being processed are being extracted on-site.

4. All reclamation work has been completed pursuant to the approved reclamation plan for any mineral extraction activities that occurred on-site after January 1, 1976.

D. Emergency excavations or grading conducted by the State Department of Water Resources or the Reclamation Board for the purpose of averting, alleviating, repairing, or restoring damage to property due to imminent or recent floods, disasters, or other emergencies.

E. Excavations or grading for the exclusive purpose of obtaining materials for road construction and maintenance for timber or forest operations with an approved timber harvest plan, if:

1. The land is owned by the same person or entity; and

2. The excavation is conducted adjacent to timber or forest operation roads.

This exemption is only available if slope stability and erosion are controlled in accordance with Board regulations. Upon closure of the site, the person closing the site shall implement necessary revegetation measures and post-closure uses in consultation with the State Department of Forestry and Fire Protection. This exemption does not apply to on-site excavation or grading that occurs within 100 feet of a Class One watercourse or within 75 feet of a Class Two watercourse, or to excavations for materials that are or have been sold for commercial purposes.

F. Excavations, grading, or other earthmoving activities in an oil or gas field that are integral to, and necessary for, ongoing operations for the extraction of oil or gas that comply with all of the following conditions:

1. The operations are consistent with the General Plan and zone requirements of the site;

2. The operations are being conducted in accordance with the California Public Resources Code Division 3, Section 3000 et seq;

3. The earthmoving activities are within oil or gas field properties under a common owner or operator; and

4. No excavated materials are sold for commercial purposes.

G. Recreational mining or prospecting, as defined in Article 8 (Glossary: See “Mining”) of this Title.

130.29.050 General Requirements

A. **Reclamation Plan and Financial Assurances.** All mining operations, as defined in Article 8 (Glossary: See "Mining") of this Title, whether existing or proposed after the effective date of this ordinance, shall be subject to the provisions of this Title, along with the California Surface Mining and Reclamation Act of 1975 [California Public Resources Code Section 2710 et seq., as amended, (hereinafter referred to as "SMARA")], California Public Resources Code Section 2207 relating to annual reporting requirements, and State Mining and Geology Board regulations (hereinafter referred to as "State regulations") for surface mining and reclamation practice (California Code of Regulations, Title 14, Division 2, Section 8, Subsection 1, Section 3500 et seq.).

B. **Statute Incorporation by Reference.** The provisions of SMARA, California Public Resources Code Section 2207, and State regulations, as may be amended from time to time, are made a part of this Chapter by reference, with the same force and effect as if the provisions therein were specifically and fully set out herein. When the provisions of this Chapter are more restrictive than correlative State provisions, this Chapter shall prevail.

C. **Vested Rights.** No person who has established a vested right to conduct surface mining operations as a nonconforming use in conformance with State regulations prior to January 1, 1976, shall be required to secure a permit to mine, so long as the vested right continues and as long as no substantial changes have been made in the operation except in accordance with SMARA, State regulations, applicable State law, and this Chapter. Where a person with vested rights has continued surface mining in the same area subsequent to January 1, 1976, said person shall obtain County approval of a reclamation plan and financial assurances covering the mined lands disturbed by such subsequent surface mining. In those cases where an overlap exists (in the horizontal and/or vertical sense) between pre- and post-Act mining, the reclamation plan shall call for reclamation proportional to that disturbance caused by the mining after the effective date of January 1, 1976. All other requirements of State law and this Subsection shall apply to vested mining operations.

130.29.060 Minimum Lot Size. *(Setbacks and relief provisions have been moved to Chapter 130.30 (Setback Requirements and Exceptions), Subsection 130.30.030.F (Special Setbacks for Mineral Resource Protection) in Article 3 (Site Planning and Project Design Standards) of this Title.*

The information required under this Section for lands within the –MR Combining Zone shall be forwarded to the State Geologist in compliance with SMARA Sections 2762-2763. The subdivision of lands within or adjacent to the –MR Combining Zone into lots less than 20 acres shall be prohibited, except when the following occurs:

A. The applicant has submitted to the County an evaluation of the area in order to ascertain the significance of the mineral resources located on the subject property;

B. The review authority finds that the proposed subdivision will not threaten the potential to extract minerals in the area; and

C. The review authority shall specifically state the reasons for permitting the proposed subdivision, and how it will not adversely affect the ability to utilize the resource, including its effect on the regional market for the mineral resource.

130.29.070 Mineral Exploration

A. Exploration for economic mineral or ore deposits shall be allowed in compliance with Chapter 110.14 (Grading, Erosion, and Sediment Control) of Title 110 (Buildings and Construction) in the County Code of Ordinances when applicable and the permit requirements in Table 130.29.070.1 (Mineral Exploration and Mining) below in this Section, subject to the levels of disturbance in Subsection B below in this Section.

Table 130.29.070.1 – Mineral Exploration and Mining

For zone nomenclature, refer to Chapters 130.21 through 130.25.	**A** **Administrative Permit required (130.52.010)** **CUP** **Conditional Use Permit required (130.52.021)** **—** **Use not allowed in zone**		
Zones	**Level A**	**Level B**	**Level C**
RM, R1, R1A, R2A, R3A, CPO, CL, CM	A	—	—
RE, RL, AE, AP, PA, AG, FR, TPZ	A	CUP	CUP
IL, R&D, CC, CR, CG, RFL, RFH, TC, OS	A	CUP	CUP
IH	A	A	CUP

B. For the purpose of this Chapter, the levels of disturbance for mineral exploration are defined as follows:

1. **Level A.**

   a. Methods of geological survey, geophysical, or geochemical prospecting are used;

   b. Bore holes and trial pits not exceeding 100 cubic yards of overburden or other mineral disturbance may be created; and

   c. No explosives shall be used, and no drifting, tunneling, de-watering, or water discharge shall be allowed.

2. **Level B.**

   a. One thousand cubic yards or less of overburden or mineral deposits are disturbed;

   b. The operation disturbs one acre or less in any one location; and

   c. No de-watering will occur and water will not be discharged from the site as a result of the operation.

3. **Level C.**

   a. More than 1,000 cubic yards of overburden or mineral deposits are disturbed;

   b. The operation disturbs more than one acre in any one location; or

   c. De-watering will occur or water will be discharged from the site as a result of the operation.

C. Level C operations are considered mining under criteria (3.a) and (3.b) above, and shall be subject to the approval of a reclamation plan under the requirements of Section 130.29.090 (Mining and Reclamation) below in this Chapter and SMARA, as well as buffer requirements in compliance with Section 130.29.080 (Measure A Initiative Ordinance) below in this Chapter.

130.29.080 Measure A Initiative Ordinance

A. **Policy.** It is the policy of the County that use conflicts between rural and rural residential uses and mining uses must be minimized by the creation of adequate buffer zones between such potentially conflicting uses. Furthermore, it is essential to the County to preserve the rural residential and residential character of the County and that mining and exploration for mining be allowed to proceed only with adequate buffering between mining and residential uses. It is a further policy of the County that managing these conflicting uses will aid in deterring adverse environmental impacts, including, but not limited to, wildlife, groundwater, flora, fauna, traffic, dust, air quality, and adverse impacts on public health, safety, and welfare and will result in mutual benefit to both future mining and residential uses.

B. **Implementation.** In addition to any other requirements set forth in any applicable zone, all projects for any kind of open pit mining or strip mining for purposes of exploration or extraction which require the removal of overburden in a total amount of more than 1,000 cubic yards on any lot shall require issuance of a Conditional Use Permit. However, prior to issuing the Conditional Use Permit, in addition to any other necessary findings, the review authority shall make the finding that all

boundaries of the proposed project for open pit mining or strip mining shall be greater than a linear distance of 10,000 feet from any existing residential, hospital, church, or school use, including, but not limited to, nursery or day care uses or any residential, hospital, church or school use as designated in the General Plan or any community or specific plan, or as allowed by this Title. This finding shall not apply to a detached, single-unit residential dwelling located on the lot for which the Conditional Use Permit is sought.

C. **Exception.** An exception to this Section shall be granted only under limited circumstances after a public hearing properly noticed to all land owners within 10,000 feet of the proposed project boundaries and upon findings by the review authority on the basis of substantial evidence in the record that: (1) the proposed project will not have any adverse impact on the environment or upon public health, safety, and/or welfare; and that (2) the project will not discourage residential use so designated in the General Plan or any community or specific plan or as allowed by this Title within 10,000 feet of the project boundaries.

D. **Incorporation of These Policies into the General Plan Text and Maps.** Upon passage of the ordinance codified in this Section, the County shall amend the General Plan text and maps to incorporate and conform to the provisions of this Section.

E. **Implementation and Consistency.** Upon passage of the ordinance codified herein, the General Plan and this Title shall be interpreted so as to give effect to the provisions of this Section. The provisions of this Section shall prevail over any revisions to the General Plan and any specific plans. Any amendments to the General Plan and this Title made subsequent to the passage of the ordinance codified in this Section shall be consistent with the provisions of this Section.

F. **Referendum.** This Section may be amended or repealed only by a majority of the voters of El Dorado County.

G. **Severability.** If any portion of this Section is declared invalid, the remaining portions are to be considered valid. (Adopted 11/20/84)

130.29.090 Mining and Reclamation

A. Subsurface mining shall be allowed in any zone subject to issuance of a Conditional Use Permit, and only after impacts to the environment and affected surface uses have been adequately reviewed and found to be in compliance with the California Environmental Quality Act (CEQA). Of particular importance shall be the impact of the operation on surface uses, water quantity and quality, and noise and vibration impacts associated with surface access.

B. Surface access to subsurface mines shall only be allowed in those zones which permit Levels B and C activities under Table 130.29.070.1 (Mineral Exploration and Mining) above in this Chapter, subject to a Conditional Use Permit.

C. Vent and escape shafts may be allowed in any zone subject to an Administrative Permit.

D. A Conditional Use Permit for mining activities shall consider the following:

1. Natural vegetation and topography for buffering;
2. Central location of processing equipment and equipment storage;
3. Dust control;
4. Circulation and construction standards for access roads;
5. Erosion control;
6. Revegetation and re-establishment of natural appearing features on the site following mining activities;
7. Hours of operation;
8. Night lighting;
9. Security fencing;
10. Noise impacts on adjacent and nearby lands, and control of noise pursuant to standards adopted in the General Plan;
11. Protection of water quality, sensitive wildlife habitat, and/or sensitive plant communities;
12. Phased reclamation that proceeds concurrently with surface mining; and
13. Ultimate uses.

E. Applications for a Conditional Use Permit and/or reclamation plan for surface mining or land reclamation projects shall be made on forms provided by the Department. Said applications shall be filed in accordance with Sections 130.52.021 (Conditional Use Permit) in Article 5 (Planning Permit Processing) of this Title, and 130.29.100 (Standards for Reclamation) below in this Chapter. The forms for reclamation plan applications shall require, at a minimum, each of the elements required by SMARA (Sections 2772 and 2773) and State regulations, and any other requirements deemed necessary to facilitate an expeditious and fair evaluation of the proposed reclamation plan, as established at the discretion of the Director.

F. For surface mining operations that are exempt from a Conditional Use Permit in compliance with this Chapter, the reclamation plan application shall include the following:

1. All information concerning the mining operation that is required by the Director for processing the reclamation plan. All documentation for the reclamation plan shall be submitted to the County at one time.

2. The person submitting the reclamation plan shall sign a statement accepting responsibility for reclaiming the mined lands in accordance with the reclamation plan. Said response shall be kept by the Department in the mining operation's permanent record. Upon sale or transfer of the operation, the new operator shall submit a signed and notarized statement of responsibility to the Department for placement in the permanent record.

G. Within 30 days of accepting a Conditional Use Permit application as complete for a surface mining operation and/or a reclamation plan, the Department shall notify the State Department of Conservation of the filing of the application in compliance with SMARA Section 2774(d).

H. The Director shall review the reclamation plan and financial assurance cost estimate (Subsection 130.29.100.B, Financial Assurances, below in this Chapter) within 60 days. Said review shall be limited to whether the reclamation plan and financial assurance cost estimate substantially meets the applicable requirements of SMARA (Sections 2772, 2773, and 2773.1), the State regulations (Sections 3500 through 3505, and Sections 3700 through 3713), and this Chapter. The operator shall have 60 days to submit the revised reclamation plan and financial assurance cost estimate addressing the identified deficiencies to the County for review and approval.

I. Upon completion of the environmental review procedure and filing of all documents required by the Director, consideration of the Conditional Use Permit and\or reclamation plan for the proposed or existing surface mine shall be completed in compliance with State regulations at a public hearing pursuant to SMARA Section 2774. The Commission shall be the review authority of original jurisdiction for the Conditional Use Permit or reclamation plan, or when multiple applications such as a reclamation plan, Conditional Use Permit, and/or zone change are filed.

J. The Conditional Use Permit application and/or reclamation plan shall be subject to review by State as follows:

1. In compliance with SMARA Section 2774(d), the State Department of Conservation shall be given 30 days to review and comment on the reclamation plan and 45 days to review and comment on the financial assurance. The Commission shall evaluate written comments received, if any, from the State Department of Conservation during the comment periods.

2. Whenever mining operations are proposed in the 100-year floodplain of any stream, shown as Special Flood Hazard Areas on the Flood Insurance Rate Maps issued by the Federal Emergency Management Agency, and within one mile, upstream or downstream, of any State highway bridge, the Department shall also notify the State Department of Transportation.

3. The Department shall prepare a written response describing the disposition of the major issues raised by the State for the Commission's approval. In particular, when the Commission's position is at variance with the recommendations and objections raised in the State's comments, the written response shall address, in detail, why specific comments and suggestions were not accepted. Copies of any written comments received and responses prepared by the Commission shall be promptly forwarded to the operator/applicant.

K. Subsequent to the appropriate environmental review, the Department shall prepare a staff report with recommendations for consideration by the Commission. The Commission shall hold at least one public hearing on the Conditional Use Permit application and/or reclamation plan.

L. Prior to rendering a decision to approve the Conditional Use Permit application and/or reclamation plan and in addition to making findings of consistency with the requirements and standards of this Title, including those under Subsection 130.52.020.C (Specific Findings for Conditional/Minor Use Permits) in Article 5 (Planning Permit Processing) of this Title, the Commission shall make the following findings:

1. Conditional Use Permit approvals for surface mining operations shall include a finding that the project complies with the provisions of the SMARA, as amended, and the State regulations.

2. For reclamation plans, the following findings shall be required:

   a. The reclamation plan complies with SMARA Sections 2772 and 2773; and the applicable requirements of the State regulations (Sections 3500 through 3505, and Sections 3700 through 3713).

   b. The reclamation plan restores the mined lands to a usable condition that is readily adaptable to alternative uses pursuant to the plan consistent with this Chapter, the General Plan, and any applicable specific plan or community plan.

   c. The reclamation plan is not considered detrimental to the public health, safety, and welfare.

d. The County's written response to the State Department of Conservation has been prepared and considered by the decision-making body. Said response adequately describes the disposition of major issues raised by the Department of Conservation and where the County's position is at variance with the recommendations and objections raised by the State Department of Conservation the County's response addresses, in sufficient detail, why the recommendations and objections were not accepted.

M. Prior to final approval of a reclamation plan or any amendments to the reclamation plan, the Commission shall certify to the State Department of Conservation that the reclamation plan complies with the applicable requirements of State law, and shall submit the plan, or amendments to the State Department of Conservation for review.

1. If a Conditional Use Permit application is being processed concurrently with the reclamation plan, the Commission may also simultaneously conceptually approve the Conditional Use Permit. However, the Commission may defer action on the Conditional Use Permit until taking final action on the reclamation plan.

2. If necessary to comply with permit processing deadlines, the Commission may conditionally approve the Conditional Use Permit so that it shall not become effective until cost estimates for financial assurances have been reviewed by the State Department of Conservation and final action has been taken on the reclamation plan and financial assurances by the County. The Commission shall then take action to approve, conditionally approve, or deny the Conditional Use Permit and/or reclamation plan pursuant to SMARA Section 2770(d).

N. Time limits may be set on any Conditional Use Permit for mining operations based on a determination by the review authority that such a time limit is necessary to protect the public health and safety, and to protect the welfare of nearby property owners. Said time limit shall be set on a case-by-case basis, based on the reasonably expected life of the mine and potential conflicts with neighboring uses.

O. The Department shall forward a copy of each approved Conditional Use Permit for the mining operations and/or approved reclamation plan, and a copy of the approved financial assurances to the State Department of Conservation within 30 days following the approval. By July 1 of each year, for each active or idle mining operation, the Department shall submit to the State Department of Conservation a copy of the Conditional Use Permit or reclamation plan amendments, as applicable, or a statement that there have been no changes during the previous year.

P. Amendments to an approved reclamation plan may be submitted detailing proposed changes from the original plan. Substantial deviations from the approved reclamation plan shall not be undertaken until the amendment has been filed with, and approved

by, the Commission. Minor deviations from the approved reclamation plan may be approved by the Director where a finding can be made that the minor deviation substantially conforms to the approved reclamation plan.

Q. Each Conditional Use Permit for a mining operation shall be reviewed periodically for compliance with the requirements of the permit. The costs of said review shall be funded by the holder of the Conditional Use Permit. The time period for said review shall be set by a condition of approval, but in no case shall it exceed five years.

R. Recordation on property titles of the presence of important mineral resources within the (–MR) Combining Zone may be a condition of approval for any development project in the impacted area. Prior to approving a use that would otherwise be incompatible with mineral resource protection, conditions of approval may be applied to encroaching development projects to minimize potential conflicts.

130.29.100 Standards for Reclamation

A. **Compliance with Regulations.** All reclamation plans shall comply with the provisions of SMARA Sections 2772 and 2773, and State regulations (Sections 3500 through 3505). Reclamation plans approved after January 15, 1993, reclamation plans for proposed new mining operations, and any substantial deviations to previously approved reclamation plans, shall also comply with the requirements for reclamation performance standards under State regulations (Sections 3700 through 3713).

1. **Additional Standards.** The Commission may impose additional performance standards developed either in review of individual projects, as warranted, or through the formulation and adoption of county-wide performance standards.

2. **Phasing.** Reclamation activities shall be initiated at the earliest possible time on those portions of the mined lands that will not be subject to further disturbance. Interim reclamation may also be required for mined lands that have been disturbed and that may be disturbed again in future operations. Reclamation may be done on an annual basis, in stages compatible with continuing operations, or on completion of all excavation, removal, or fill, as approved by the County. Each phase of reclamation shall be specifically described in the reclamation plan and shall include:

a. The beginning and expected ending dates for each phase;

b. All reclamation activities required;

c. Criteria for measuring completion of specific reclamation activities; and

d. Estimated costs for completion of each phase of reclamation.

B. **Financial Assurances.** To ensure that reclamation will proceed in accordance with the approved reclamation plan, the County shall require security, as a condition of approval, which shall be released upon satisfactory performance. The applicant may post security in the form of a surety bond, a trust fund, cash deposits, escrowed negotiable securities, or an irrevocable letter of credit from an accredited financial institution in a form and manner acceptable to the County and the State Mining and Geology Board as specified in State regulations. In reviewing the method of security, the County shall make a reasonable determination of its adequacy to perform reclamation in accordance with the surface mining operation's approved reclamation plan. Financial assurances shall be made payable to the County and the State Department of Conservation.

1. **Compliance Required.** Financial assurances will be required to ensure compliance with all elements of the approved reclamation plan, including, but not limited to, revegetation and landscaping requirements, restoration of aquatic or wildlife habitat, restoration of water bodies and water quality, slope stability and erosion and drainage control, disposal of hazardous materials, removal of structures and equipment, and other measures if necessary.

2. **Cost Estimates.** Cost estimates for the financial assurance shall be submitted to the Department for review and approval prior to the operator securing financial assurances. The Director shall forward a copy of the cost estimates, together with any documentation received supporting the amount of the cost estimates, to the State Department of Conservation for review. If the State Department of Conservation does not comment within 45 days of receipt of these estimates, it shall be assumed that the cost estimates are adequate, unless the County has reason to determine that additional costs may be incurred. The Director shall have the discretion to approve the financial assurance if it meets the requirements of this Chapter, SMARA, and State regulations.

3. **Basis for Assurance Amount.** The amount of the financial assurance shall be based upon the estimated costs of reclamation for the years or phases stipulated in the approved reclamation plan, including any maintenance of reclaimed areas as may be required, subject to adjustment for the actual amount required to reclaim lands disturbed by surface mining activities since January 1, 1976, and new lands to be disturbed by surface mining activities in the upcoming year.

    a. Cost estimates should be prepared by a California licensed professional engineer and/or other similarly licensed and qualified professional retained by the operator and approved by the Director.

    b. The estimated amount of the financial assurance shall be based on an analysis of physical activities necessary to implement the approved reclamation plan, the unit costs for each of these activities, the number of units of each of these activities, and the actual administrative costs.

c. Financial assurances to ensure compliance with revegetation, restoration of water bodies, restoration of aquatic or wildlife habitat, and any other applicable element of the approved reclamation plan shall be based upon cost estimates that include but may not be limited to labor, equipment, materials, mobilization of equipment, administration, reasonable profit by a commercial operator other than the permittee, and inspections and administration by the County and\or persons under contract by the County.

d. A contingency factor of 10 percent shall be added to the cost of financial assurances.

4. **Abandonment of Operations.** In projecting the costs of financial assurances, it shall be assumed without prejudice or insinuation that the surface mining operation could be abandoned by the operator and, as a consequence, the County or State Department of Conservation may need to contract with a third party commercial company for reclamation of the site.

5. **Effective Period.** The financial assurances shall remain in effect for the duration of the surface mining operation and any additional period until reclamation is completed, including any maintenance required.

6. **Annual Adjustment.** The amount of financial assurances required of a surface mining operation for any one year shall be adjusted annually to account for new lands disturbed by surface mining operations, inflation, and reclamation of lands accomplished in accordance with the approved reclamation plan. The financial assurances shall include estimates to cover reclamation for existing conditions and anticipated activities during the upcoming year, excepting that the operator may not claim credit for reclamation scheduled for completion during the coming year.

7. **Revisions.** Revisions to financial assurances shall be submitted to the Director each year prior to the anniversary date for approval of the financial assurances. Said revisions shall be forwarded to the State Department of Conservation for review in accordance with this Chapter. The financial assurance shall cover the cost of existing disturbance and anticipated activities for the next calendar year, including any required interim reclamation. If revisions to the financial assurances are not required, the operator shall explain in written detail why revisions are not required.

C. **Public Records.** Reclamation plans, reports, applications, and other documents submitted in compliance with this Chapter are public record, unless it can be demonstrated to the satisfaction of the lead agency that the release of the information, or part thereof, would reveal production, reserves, or rate of depletion, and title to protection as proprietary information. The review authority shall identify such proprietary information as a separate part of the application. Proprietary information

shall be made available only to the State Department of Conservation and to persons authorized in writing by the operator.

D. **Documents Furnished to State.** A copy of all reclamation plans, reports, applications, and other documents submitted in compliance with this Chapter shall be furnished to the State Department of Conservation by the review authority upon request.

E. **Succession of Interest.** Whenever one operator succeeds to the interest of another in any uncompleted surface mining operation by sale, assignment, transfer, conveyance, exchange, or other means, the successor shall be bound by the provisions of the approved Conditional Use Permit and/or reclamation plan and the provisions of this Chapter.

F. **Appeals.** Any person shall have the right to appeal to the Board an act or determination of the Department or the Commission in the exercise of the authority granted in this Section, in compliance with Section 130.52.090 (Appeals) in Article 5 (Planning Permit Processing) of this Title.

G. **Violations and Penalties.** If the Director determines, based upon an annual inspection or otherwise confirmed by an inspection of the mining operation, that a surface mining operation is not in compliance with this Chapter, an approved Conditional Use Permit, and/or approved reclamation plan, the County shall follow the procedures set forth in SMARA Sections 2774.1 and 2774.2 concerning violations and penalties, such as administrative fines, as well as procedures for revocation of the Conditional Use Permit (Section 130.54.090, Revocation or County Mandated Modification of a Permit) in Article 5 (Planning Permit Processing) of this Title, which is not preempted by SMARA.

130.29.110 Interim Management Plans

A. Within 90 days of a surface mining operation becoming idle, the operator shall submit to the Department a proposed Interim Management Plan (IMP). The proposed IMP shall fully comply with the requirements of SMARA including, but not limited to, all Conditional Use Permit approval conditions and measures the operator will implement to maintain the site in a stable condition for public health and safety. The proposed IMP shall be submitted on forms provided by the Department, and shall be processed as an amendment to the reclamation plan. IMPs shall not be considered a project pursuant to CEQA.

B. Financial assurances for idle operations shall be maintained as though the operation were active.

C. Upon receipt of a complete proposed IMP, the Department shall forward the IMP to the State Department of Conservation for review. The IMP shall be submitted to the State Department of Conservation at least 30 days prior to approval by the Director.

D. Within 60 days of receipt of the proposed IMP, or a longer period mutually agreed upon by the Director and the operator, the Director shall review and approve or deny the IMP in accordance with this Section. The operator shall have 30 days, or a longer period mutually agreed upon by the operator and the Director, to submit a revised IMP. The Director shall approve or deny the revised IMP within 60 days of receipt.

E. The IMP may remain in effect for a period not to exceed five years, at which time the Director may renew the IMP for another period not to exceed five years, or require the surface mining operator to commence reclamation in accordance with its approved reclamation plan.

F. The approved Conditional Use Permit shall be considered active and not subject to Subsection 130.54.060.C (Permit Expiration) in Article 5 (Planning Permit Processing) of this Title on operations for which an IMP has been approved by the Director or submitted to the Director for review.

130.29.120 Annual Report Requirements

A. Surface mining operators shall forward an annual surface mining report to the State Department of Conservation and to the Department on a date established by the State Department of Conservation, upon forms furnished by the State Mining and Geology Board. New mining operations shall file an initial surface mining report and any applicable filing fees with the State Department of Conservation within 30 days of permit approval, or before commencement of operations, whichever is sooner. Any applicable fees, together with a copy of the annual inspection report, shall be forwarded to the State Department of Conservation at the time of filing the annual surface mining report.

B. The Department shall arrange for an inspection of a surface mining operation within six months of receipt of the annual report to determine whether the surface mining operation is in compliance with the approved Conditional Use Permit conditions and/or reclamation plan, approved financial assurances, and State regulations. In no event shall less than one inspection be conducted in any calendar year. Said inspections may be made by a State-registered geologist, State-registered civil engineer, State-licensed landscape architect, or State-registered forester, who is experienced in land reclamation and who has not been employed by the mining operation in any capacity during the previous 12 months, or by other qualified specialists, as selected by the Director. All inspections shall be conducted using a form approved and provided by the State Mining and Geology Board.

1. The Department shall notify the State Department of Conservation within 30 days of completion of the inspection that said inspection has been conducted and shall forward a copy of said inspection notice and any supporting documentation to the mining operator.

2. The operator shall be solely responsible for the reasonable cost of such inspection, including the cost of persons under contract to the County to perform such inspections.

3. Failure by the operator to allow such required inspections by the Department or other responsible County agency shall constitute grounds for revocation of the Conditional Use Permit or termination of the vested mining activity.

ARTICLE 3 – SITE PLANNING AND PROJECT DESIGN STANDARDS

CHAPTER 130.30 – GENERAL DEVELOPMENT STANDARDS

130.30.010 Applicability
130.30.020 Minimum Area and Width of Lots
130.30.030 Parcel Size Exception – Parcels Conveyed to Government Agency
130.30.040 Parcel Size Exception – Same Generally
130.30.050 Setback Requirements and Exceptions
130.30.060 Height Limits and Exceptions
130.30.070 Fences, Walls, and Retaining Walls
130.30.080 Hillside Development Standards; 30 Percent Slope Restriction
130.30.090 Gates
130.30.100 *Reserved*

CHAPTER 130.31 – AFFORDABLE HOUSING REQUIREMENTS AND INCENTIVES

130.31.010 Content
130.31.020 Definitions
130.31.030 Eligibility for Bonus, Incentives, and/or Concessions
130.31.040 Bonuses, Incentives, and Concessions Allowed
130.31.050 Processing of Requests
130.31.060 Continued Availability of Affordability
130.31.070 Location of Bonus Units
130.31.080 Time of Construction and Occupancy
130.31.090 Design

CHAPTER 130.32 – FLOOD DAMAGE PREVENTION

130.32.010 Statutory Authorization, Findings of Fact Content and Methods
130.32.020 Definitions
130.32.030 General Provisions
130.32.040 Administration
130.32.050 Provisions for Flood Hazard Reduction
130.32.060 Variance Procedures

CHAPTER 130.33 – LANDSCAPING STANDARDS

130.33.010 Content
130.33.020 Applicability
130.33.030 Exemption

CHAPTER 130.34 – OUTDOOR LIGHTING

130.34.010 Content
130.34.020 Outdoor Lighting Standards
130.34.030 Exemptions
130.34.040 Effect on Existing Outdoor Lighting

CHAPTER 130.35 – PARKING AND LOADING
130.35.010 Content
130.35.020 Definitions
130.35.030 Off-street Parking and Loading Requirements

CHAPTER 130.36 – SIGNS
130.36.010 Content and Applicability
130.36.020 General Sign Requirements
130.36.030 Exemptions
130.36.040 Permanent Signs
130.36.050 Temporary Signs
130.36.060 Community Sign Programs
130.36.070 Sign Development and Design Standards
130.36.080 Permit Requirements and Review Procedures
130.36.090 Prohibited Signs
130.36.100 Illegal, Abandoned, and Nonconforming Signs
130.36.110 Signs on County Property
130.36.120 Definitions

CHAPTER 130.37 – NOISE STANDARDS
130.37.010 Content
130.37.020 Exemptions
130.37.030 Applicability
130.37.040 Definitions
130.37.050 Acoustic Analysis Requirements
130.37.060 Noise Standards
130.37.070 Noise Reduction Measures
130.37.080 Noise Level Measurements

CHAPTER 130.38 – *RESERVED*

CHAPTER 130.39 – OAK RESOURCES CONSERVATION
130.39.010 Content
130.39.020 Applicability
130.39.030 Definitions
130.39.040 Prohibition
130.39.050 Exemptions and Mitigation Reductions
130.39.060 Oak Tree and Oak Woodland Removal Permits – Ministerial Development Projects
130.39.070 Oak Tree and Oak Woodland Removal Permits – Discretionary Development Projects
130.39.080 In-Lieu Fee Appeals
130.39.090 Enforcement
130.39.100 Mitigation Maintenance, Monitoring and Reporting

CHAPTER 130.30 – GENERAL DEVELOPMENT STANDARDS

Sections:

130.30.010 Applicability
130.30.020 Minimum Size and Width of Lots
130.30.030 Parcel Size Exception – Parcels Conveyed to Government Agency
130.30.040 Parcel Size Exception – Same Generally
130.30.050 Setback Requirements and Exceptions
130.30.060 Height Limits and Exceptions
130.30.070 Fences, Walls, and Retaining Walls
130.30.080 Hillside Development Standards; 30 Percent Slope Restriction
130.30.090 Gates
130.30.100 *Reserved*

130.30.010 Applicability

This Chapter identifies development standards that apply to all zones in order to provide consistent application of development standards throughout the County. Standards pertaining to the creation of new lots, new projects or the modification of existing lots are found in the Design and Improvement Standards Manual (DISM)/Land Development Manual (LDM), or successor document as applicable.

130.30.020 Minimum Area and Width of Lots

A. The minimum area and width of lots shall be as defined in the Development Standards for each zone as set forth in Chapters 130.21 (Agricultural, Rural , and Resources Zones) through 130.26 (Meyers Area Plan [MAP] Zone) in Article 2 (Zones, Allowed Uses, and Zoning Standards) of this Title, inclusive, and Title 120 (Subdivisions) of the County Code of Ordinances.

B. **Measurement of Lot Width.** Lot width shall be measured in accordance with the following:

1. The lot width shall be measured at the front lot line or the edge of the right-of-way or road easement. Where a lot is located at the end of a cul-de-sac or on the outside curve of a road, the lot width shall be measured at the minimum front setback line as established by the development standards of the zone.

2. For a flag lot, the measurement requirements under Subsection B.1 above in this Section shall be taken across that portion of the lot not containing the access strip.

130.30.030 Parcel Size Exception – Parcels Conveyed to Government Agency

A. The minimum parcel size as set forth in each of the zone district regulations provided for in this Section shall be inapplicable to parcels created for the singular purpose of conveyance, dedication or transfer of the parcel to a governmental agency, public entity or public utility for such uses by the agency, entity or utility as may be authorized by law.

B. At such time as a parcel created under the provisions of Subsection A of this section as conveyed or otherwise transferred to an entity other than a governmental agency, public entity or public utility, then the parcel shall be required to meet applicable minimum size regulations.

130.30.040 Parcel Size Exception – Same Generally

In the following zone districts: REAG, LA, PA (where the property is not under a Williamson Act contract), RL, and FR, an existing parcel may be subdivided in such a way that one new parcel of less size than is required in the prevailing zone regulations is created within each subdivision provided the following conditions exist:

A. Either the parcel is shown on the County tax roll or recorded deed as a separate parcel, is described as a fractional division of a section and a subsequent survey of the parcel shows it to be a maximum of 10 percent less than the acreage indicated on that tax roll; or

B. The parcel is shown on the 1979 County tax roll as a separate parcel and the roll shows it to be a maximum of 10 percent less than the acreage required to make even divisions into the minimum parcel size to which it is zoned; or

C. The parcel is shown on the 1979 County tax roll as a separate parcel and a survey shows it to be a maximum of 10 percent less than the acreage required to make even divisions into the minimum parcel size to which it is zoned; and both of the following:

1. The smallest parcel proposed to be created is no less than 75 percent of the minimum size required by the applicable zone but, in no case shall a parcel be created less than 4.5 acres when groundwater dependent; and

2. All other parcels proposed to be created are no less than the minimum required by the applicable zone or no more than one-tenth of an acre larger than the minimum.

No parcel size exception shall be granted where the exception would conflict with general plan policies or provisions of this Title that require buffers to adjacent parcels.

130.30.050 Setback Requirements and Exceptions

All structures and buildings (see Article 8 - Glossary: "Structure" of this Title) shall be located on a lot so as to conform to the setback requirements established for the zone in which the lot is located, as set forth in Chapters 130.21 (Agricultural, Rural , and Resources Zones) through 130.26 (Meyers Area Plan [MAP] Zone) in Article 2 (Zones, Allowed Uses, and Zoning Standards) of this Title, inclusive, except as provided in this Chapter unless and until a Variance is granted in compliance with Section 130.52.070 (Variance) in Article 5 (Planning Permit Processing) of this Title or standards are modified pursuant to a Development Plan permit in compliance with 130.52.040 (Development Plan Permit) in Article 5 (Planning Permit Processing) of this Title.

A. **Measurement of Setbacks.** Setbacks shall be measured from the closest of either a property line, the edge of a road easement, or the edge of a right-of-way line to the nearest point of the foundation or support of a building or structure, on a line perpendicular to the property line, road easement, or right-of-way line.

1. **Setbacks adjacent to existing private roads without defined right-of-way or road easements** shall be measured from the edge of the maintained area of the road. Setbacks adjacent to County-maintained roadways shall be measured from a distance of 30 feet from the centerline of the road.

2. Where the Board has adopted a future roadway alignment, the minimum setback shall be measured from the edge of the future right-of-way line.

3. **Expanded setbacks from major roads** identified in the Design and Improvement Standards Manual (DISM)/Land Development Manual (LDM), or successor document shall be applied to protect future right of way for the planned widening of those roads. Proposed development adjacent to these roads shall be increased by the distance shown in the DISM/LDM, or successor document.

4. **Corner Lots.** A corner lot with frontage on two or more streets shall have front yard (see Article 8 – Glossary: "Yards" of this Title) setback requirements, as identified in the Development Standards Tables in Article 2 (Zones, Allowed Uses, and Zoning Standards) of this Title, along each property line adjacent to a street, subject to the following exceptions:

a. **Double Frontage Corner Lots.** On a corner lot with frontage on two streets, the building permit application shall specify the primary front yard; the remaining street frontage shall be considered the secondary front yard, as shown in Figure 130.30.050.A (Example: Corner Lot Setbacks) below in this Section. The yard opposite the primary front yard shall be considered the rear yard. The primary front yard setback shall comply with the front yard setbacks of the zone; the secondary

front yard setback shall comply with the secondary front setback applicable to the zone.

Figure 130.30.050.A Example: Corner Lot Setbacks

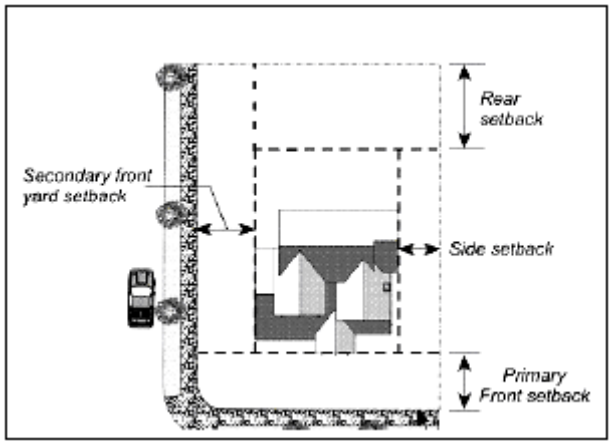

b. **Triple Frontage Corner Lots.** On a corner lot with frontage on three streets, the building permit application shall specify the primary front yard. The frontage opposite the primary front yard shall be considered a rear yard for setback purposes, providing vehicular access is restricted.

c. **Rear Setback on Triangular Lot.** Where a triangular lot has no rear lot line because its side lot lines converge to a point, an assumed line placed at the point, or vertex, of the angle and running perpendicular to a line bisecting the angle shall be considered the rear lot line for the purpose of measuring the required rear setback, as shown in Figure 130.30.050.B (Example: Rear Setbacks, Triangular Lots) below in this Section.

Figure 130.30.050.B Example: Rear Setbacks, Triangular Lots

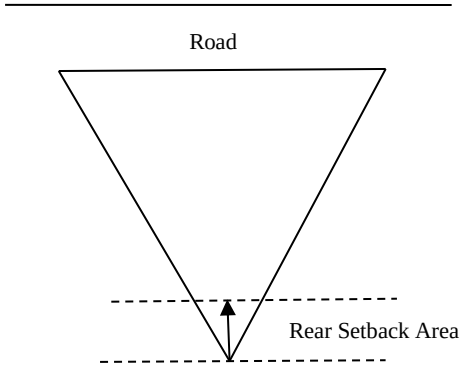

5. **Through Lots.** Through lots, or double frontage non-corner lots, shall maintain front yard setbacks for the primary frontage containing the driveway

encroachment, and rear yard setbacks for the opposite frontage, providing vehicular access is restricted. Where vehicular access is allowed, front yard setbacks shall apply.

B. **Exceptions to Setback Requirements.** The following exceptions to the setback requirements shall be allowed when the qualifying conditions have been documented by a licensed civil engineer or surveyor. All reductions in front yard setbacks shall be subject to cross visibility area (CVA) requirements under Subsection 130.30.070.B.4 (Fences, Walls, and Retaining Walls - Front Yards) below in this Chapter.

1. **Front Setback Reduction for Slope.** Where the elevation of a lot measured at the required front setback line averages six feet or more for a lot less than one acre, or eight feet or more for a lot one acre or greater, above or below the elevation at the edge of road pavement adjacent to said lot, the required front setback for a single-story structure may be reduced by 50 percent, except:

   a. Where a lot has more than one frontage, the elevation criteria set forth under this Subsection B.1 must be satisfied for all frontages.

   b. Any parking structure allowed by this Subsection B.1 at a reduced front setback shall provide at least 20 feet of parking area between the edge of road pavement and the structure.

2. **Administrative Relief.** Setback reductions for a multi-story structure, or where all frontages of a lot do not meet the elevation criteria set forth in Subsection B.1 (Front Setback Reduction for Slope) above in this Subsection may be approved under administrative relief subject to Chapter 130.52 (Permit Requirements, Procedures, Decisions, and Appeals) in Article 5 (Planning Permit Processing) of this Title provided the requirement under Subsection B.1.b above in this Subsection is met.

C. **Projections into Required Setbacks.**

1. Cornices, window canopies, eaves, bay windows, or similar architectural features, which do not qualify as habitable area under the building code; heating and air conditioning equipment; and uncovered and unenclosed decks of 30 inches in height or less, excluding handrails, may extend into any required setback by not more than 50 percent provided that no such feature shall be allowed within three feet of any side lot line.

   a. For uncovered and unenclosed decks, setbacks shall be measured from the closest portion of the deck, such as flooring, footing, or foundation, to the property line.

2. Front yards may have the following additional encroachments:

a. Fences and walls, subject to Section 130.30.070 (Fences, Walls, and Retaining Walls) below in this Chapter.

b. Bear resistant garbage can containers, subject to Subsection 3.g (Bear Resistant Garbage Can Containers) below in this Section.

c. Signs, subject to Chapter 130.36 (Signs) below in this Chapter.

3. The following encroachments or reduced setbacks into the required yards are allowed for the following specific uses, provided there is no encroachment into any public utility or drainage easement:

a. **Swimming pool, heating and air conditioning equipment** may encroach into any setback by up to 50 percent but not less than 3 feet from any lot line. When located within a required setback as allowed by this Subsection, accessory mechanical equipment that generates noise (such as air conditioning or swimming pool equipment) shall be enclosed with an appropriate noise barrier when less than 10 feet from the property line.

b. **Swimming pools** measured to the back edge (non-water side) of the bond beam and their accessory water features, such as manmade waterfalls, if 30 inches in height or less:
(1) **Front.** Setback required by zone.
(2) **Side and Rear.** 5 feet minimum.

c. **Propane Tanks** shall meet the applicable standards of the fire code (See Article 8: Glossary – "Fire Code" and "Fire Safe Regulations" of this Title) subject to the following conditions:
(1) **Front.** The propane tank may be located within the front setback provided it is not less than 10 feet from the property line and the tank is less than 40 inches in height and fully screened by fencing or landscaping.
(2) **Underground Tanks.** May be located within any setback.

d. **Portable Sheds** (non-habitable, less than 120 square feet of floor space, containing no utilities):
(1) **Front.** Setback required by zone.
(2) **Side and Rear.** 5 feet minimum, subject to fire safe regulations under Subsection D (Fire Safe Setbacks) below in this Section.

e. **Chimneys** (at ground level):
(1) **Front and Rear.** 3 feet into setbacks.
(2) **Side.** 3 feet into setback, but in no instance shall the remainder of the side yard be less than 3 feet.

(3) **Chimneys that protrude above ground level**, such as cantilevered chimney chases on the second story of a residence, shall not be subject to setback requirements.

f. **Solar Collectors** that are ground mounted shall comply with the required side and rear setbacks for the zone, subject to the height requirements and maximum reduction in setbacks allowed under state Public Resource Code Section 25981.

g. **Bear Resistant Garbage Can Containers.** A bear resistant garbage can enclosure in compliance with the approved list maintained by the Environmental Management Department shall be subject to the following minimum setbacks:

(1) 10 feet from the road as measured from the edge of the curb-face or pavement if no curbing exists. In no event shall a container be placed within the road right-of-way or easement.

(2) On corner lots, containers shall not be located within the CVA at the intersection, as shown in Figure 130.30.070.B (Cross Visibility Area (CVA) Example #2) below in this Chapter.

h. **Trellises and Arbors.**

(1) A trellis shall be considered similar to a fence for setback purposes and be subject to the requirements for fences under Section 130.30.070 (Fences, Walls, and Retaining Walls) below in this Chapter.

(2) An arbor less than 50 percent open shall be considered a structure and be subject to development standards, including setback requirements, for the zone.

D. **Fire Safe Setbacks.** Where the net acreage of a lot is one acre or larger, any new structure shall maintain a 30 foot setback from all property lines or from the centerline of the road, unless the applicable fire protection agency or the County has approved an exception, conditional or otherwise, for a reduction of the setback requirement to either the standard setback for the zone or as allowed under a Development Plan Permit.

E. **Special Setbacks for Agricultural and Timber Resource Protection.** Notwithstanding any other provision of this Title, where incompatible uses, as defined in Article 8 (Glossary: see "Incompatible Uses: Agricultural") of this Title, adjacent to the agricultural zones of LA, PA, and AG, or the Forest Resource (FR) and Timber Production Zone (TPZ), the following setbacks shall apply on those lots containing the incompatible use:

1. **Setback Standards on Lots Adjacent to Agricultural Zones**.

   a. When the agriculturally zoned lot is located within a General Plan designated Agricultural District: 200 feet.

   b. When the agriculturally zoned lot is located outside of a General Plan designated Agricultural District:
      (1) A lot with the proposed incompatible use is 10 acres or larger: 200 feet.
      (2) A lot with the proposed incompatible use is less than 10 acres: No special agricultural setback is required.

   c. When the lot adjacent to the agriculturally zoned lot is in a General Plan designated Community Region or Rural Center: 50 feet.

2. **Setback Standards on Lots Adjacent to the Forest Resource or Timber Production Zone**:

   a. When the lot adjacent to the Forest Resource or Timber Production Zone is within the General Plan designated Rural Region: 200 feet.

   b. When the lot adjacent to the Forest Resource or Timber Production zone is within a General Plan designated Community Region or Rural Center: 50 feet.

3. **Setbacks and Buffers for Adjacent Tangent Lots**. Where an agricultural or timber production zoned lot abuts a lot at a tangent or single point and where an agricultural or timber production zone setback will apply to the adjacent lot, the setback will be measured as a radius the length of the required setback, from the point of tangent into the adjacent lot, as shown in Figure 130.30.050.C (Examples: Tangential Setbacks) below in this Section:

Figure 130.30.050.C Examples: Tangential Setbacks

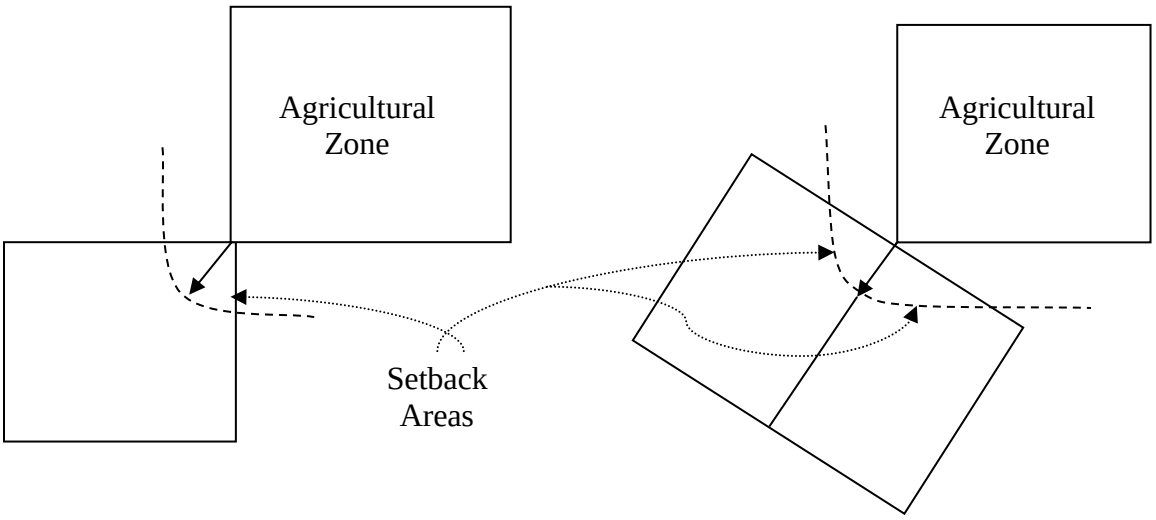

4. **Administrative Relief**. Administrative relief from the setback requirements established in Subsections E.1 through E.3 above in this Section may be granted by the Ag Commission or the Director under an Administrative Permit (Section 130.52.010, Administrative Permit, Relief, or Waiver) in Article 5 (Planning Permit Processing) of this Title in compliance with criteria set forth by resolution of the Board, as amended from time to time.

F. **Special Setbacks for Mineral Resource Protection**.

1. Notwithstanding any other provision of this Title, where incompatible uses, as defined in Article 8 (Glossary: see "Incompatible Uses: Mining") of this Title, adjacent to lands located in the -MR Combining Zone, the following setbacks shall apply on those lots containing the incompatible use:

   a. 250 feet on lots 10 acres or greater.

   b. 150 feet on lots less than 10 acres in size.

2. The required setbacks in Subsection F.1 above in this Section, may be administratively reduced under an Administrative Permit, in compliance with Section 130.52.010 (Administrative Permit, Relief, or Waiver) in Article 5 (Planning Permit Processing) of this Title by not more than 50 percent when the property owner affected by the setback has demonstrated to the Director that the mineral resource is at least 250 feet from the property line and mining activities are not likely to be carried on within 250 feet of the property line.

G. **Protection of Wetlands and Sensitive Riparian Habitat.**

1. **Content.** This subsection establishes standards for avoidance and minimization of impacts to wetlands and sensitive riparian habitat as provided in General Plan Policies 7.3.3.4, 7.4.2.5 and 7.4.2.8.

2. **Applicability.** The standards in this subsection apply to all ministerial or discretionary development proposed adjacent to any perennial streams, rivers or lakes, any intermittent streams and wetlands, as shown on the latest 7.5 minute, 1:24,000 scale United States Geological Survey (USGS) Quadrangle maps, and any sensitive riparian habitat within the County. Activities regulated under this subsection include those activities also regulated under the federal Clean Water Act (33 U.S.C. §1251 et seq.) and California Fish and Game Code (Section 1600-1607). These standards do not apply to culverted creeks and engineered systems developed or approved by the County or other public agency for collection of storm or flood waters, or systems other than natural creeks designed to deliver irrigation or water supplies. Additional standards applicable to the design of new developments or subdivisions are found in the Design and Improvement Standards Manual (DISM)/Land Development Manual (LDM), or successor document.

3. **Use Regulations.**

a. New ministerial and discretionary development shall avoid or minimize impacts to perennial streams, rivers or lakes, intermittent streams and wetlands, and any sensitive riparian habitat to the maximum extent practicable. Where avoidance and minimization are not feasible, the County shall make findings, based on documentation provided by the project proponent, that avoidance and minimization are infeasible.

b. Any new development which does not avoid impacts to wetlands and sensitive riparian habitat shall prepare and submit a Biological Resource Assessment identifying the location of all features regulated under this Section.

c. An applicant shall obtain all required permits from state or federal agencies having jurisdiction, and shall fully implement any mitigation program required as a condition of such permit. Where the area impacted is not within federal or state jurisdiction, the County shall require appropriate mitigation as recommended in a Biological Resource Assessment.

d. Ministerial development, including single family dwellings and accessory structures, shall be set back a distance of 25 feet from any intermittent stream, wetland or sensitive riparian habitat, or a distance

of 50 feet from any perennial lake, river or stream. This standardized setback may be reduced, or grading within the setback may be allowed, if a biological resource evaluation is prepared which indicates that a reduced setback would be sufficient to protect the resources.

e. All discretionary development which has the potential to impact wetlands or sensitive riparian habitat shall require a Biological Resource Assessment to establish the area of avoidance and any buffers or setbacks required to reduce the impacts to a less than significant level. Where all impacts are not reasonably avoided, the biological resource evaluation shall identify mitigation measures that may be employed to reduce the significant effects. These mitigation measures may include the requirement for compliance with the mitigation requirements of a state or federal permit, if required for the proposed development activity.

f. Any setback or buffer required by this subsection shall be measured from the ordinary high water mark of a river, perennial or intermittent stream, and the ordinary high water mark or spillway elevation of a lake or reservoir.

g. Except where otherwise provided in this section, filling, grading, excavating or obstructing streambeds is prohibited except where necessary for placement of storm drain and irrigation outflow structures approved by the County; placement of public and private utility lines; construction of bridges and connecting roadways; maintenance activities necessary to protect public health and safety; and creek restoration and improvement projects.

h. All new septic system construction shall comply with standards established by the Environmental Management Department, or applicable state and federal regulations for setbacks from lakes, rivers and streams.

i. Projects within the joint jurisdiction of the County and the Tahoe Regional Planning Agency (TRPA) shall be subject to setbacks established by TRPA.

4. **Exceptions; Uses allowed. The following uses are allowed:**

a. Native landscaping;

b. Fencing, consistent with the provisions of Subsection 130.30.070.B (Fences, Walls, and Retaining Walls - Front Yards) below in this Chapter, that does not interfere with the flow of waters or identified wildlife migration corridors;

c. Roads or driveways used primarily for access or for the maintenance of a property;

d. Utilities;

e. Storm drains into riparian areas and creeks;

f. Trails and passive recreational activities not involving the establishment of any structures;

g. Boat ramps, docks, piers, and related features used for private purposes, subject to applicable local, state, or Federal regulations;

h. Construction and maintenance of bridges, culverts, rip-rap, and other drainage facilities;

i. Agricultural activities that utilize best management practices (BMPs), as recommended by the Ag Commission and adopted by the Board.

5. **Exceptions; Conditionally Permitted Uses.**

a. The uses, and structures allowed in applicable zones are allowed within riparian areas with an approved Minor Use Permit;

b. In addition to the findings required for approval of a Minor Use Permit, the Zoning Administrator shall make all of the following findings for a Minor Use Permit for riparian area development:
   (1) The proposed use, structure, or encroachment cannot be feasibly located outside the riparian area or such location would have a more adverse effect on the stream environment.
   (2) Measures are included that provide adequate protection of wildlife habitat, water quality and in-stream habitat, and capacity for flood management.

6. **Performance Standards.**

a. Construction is prohibited in riparian buffers unless the necessary permits have been obtained from other responsible governmental agencies, and plans have been approved by the County.

b. Grading, alteration of the natural contours of the land, or cutting or alteration of natural vegetation that protects sensitive riparian habitat is prohibited within riparian areas except when such action is required for the construction of an approved development or structure, associated with an agricultural use utilizing approved BMP's, or a

creek restoration and enhancement project, or necessary to protect public health and safety.

7. **Specific setbacks for major lakes, rivers and streams.** The setbacks identified in Table 130.30.050.H.1 (Specific Riparian Setbacks) below in this Section shall be provided, unless a discretionary approval by the County provides a larger or smaller setback.

Table 130.30.050.H.1 – Specific Riparian Setbacks

Specific Riparian Setbacks	
Lakes and Reservoirs	
Bass Lake	200 Feet
Folsom Lake	200 Feet
Jenkinson Lake (Sly Park)	200 Feet
Slab Creek Reservoir	200 Feet
Stumpy Meadows Reservoir	200 Feet
Rivers	
American River (Middle and South Forks)	100 Feet
Cosumnes River (North, Middle and South Forks)	100 Feet
Rubicon River	100 Feet
Streams and Creeks	
Big Canyon Creek	50 Feet
Deer Creek (South of US Highway 50 only)	50 Feet
Camp Creek	50 Feet
Clear Creek	50 Feet
Martinez Creek	50 Feet
Pilot Creek	50 Feet
Weber Creek	50 Feet

8. **Coordination with Other Regulatory Agencies**

All required permits from the California Department of Fish and Wildlife, the U.S. Army Corps of Engineers, regional water quality control board(s), California State Water Resources Control Board, or other applicable agencies, shall be obtained prior to commencement of construction. Evidence of approval or pending approval of any such permit shall be provided to the County, including all appropriate supporting materials, environmental documentation, and studies.

130.30.060 Height Limits and Exceptions

All structures and buildings shall conform to the maximum height requirements established for the zone in which the lot is located as set forth in Chapters 130.21 (Agricultural, Rural, and Resources Zones) through 130.26 (Meyers Area Plan [MAP] Zone) in Article 2 (Zones,

Allowed Uses, and Zoning Standards) of this Title, inclusive, subject to the exceptions under Subsection C (Exceptions to Building Height Requirements) below in this Section unless a Development Plan or Conditional Use Permit is approved allowing additional height, in compliance with Sections130.52.040 (Development Plan Permit) or 130.52.021 (Conditional Use Permit) in Article 5 (Planning Permit Processing) of this Title.

A. **Measurement of Building Height.** The height of a building is determined by calculating the average finished grade of each building wall, and measuring the height between this average finished grade and the highest point of the building, as shown in Figure 130.30.060.A (Example: Building Height Calculation) below in this Section. Where a retaining wall supporting a drop in grade is within a five foot horizontal distance from the exterior wall, the height of the retaining wall shall be included in the building height. If each building wall has a different height, then the average height of all four walls is calculated to determine the actual building height, as shown in Figure 130.30.060.A (Example: Building Height Calculation) below in this Section.

Figure 130.30.060.A

EXAMPLE: BUILDING HEIGHT CALCULATION

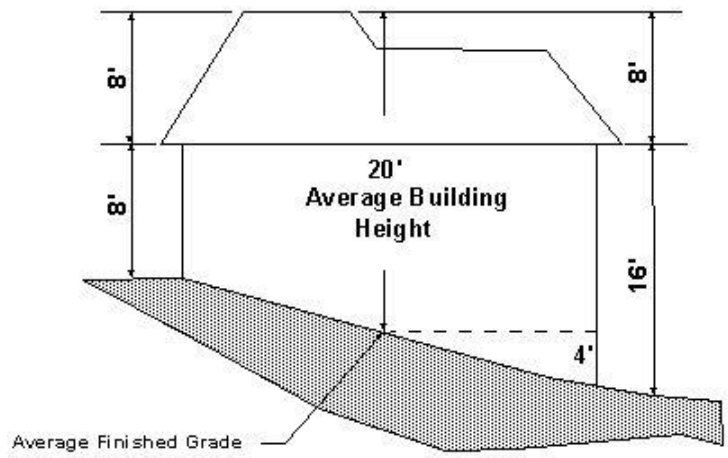

B. **Building Height Calculation for Determination of Side Yard Setback in Residential Zones.** This Subsection shall apply in all zones that require setbacks of less than 30 feet. To calculate side yard setbacks based on building height, the wall facing the side yard shall be measured in compliance with Subsection A above in this Section for average grade, but in this case the highest point of the building shall be that highest point within ten feet from the surface of the wall being measured, as shown in Figure 130.30.060.B (Example: Building Height Determination for Side Yard Setbacks) below in this Section:

Figure 130.30.060.B Example: Building Height Determination for Side Yard Setbacks

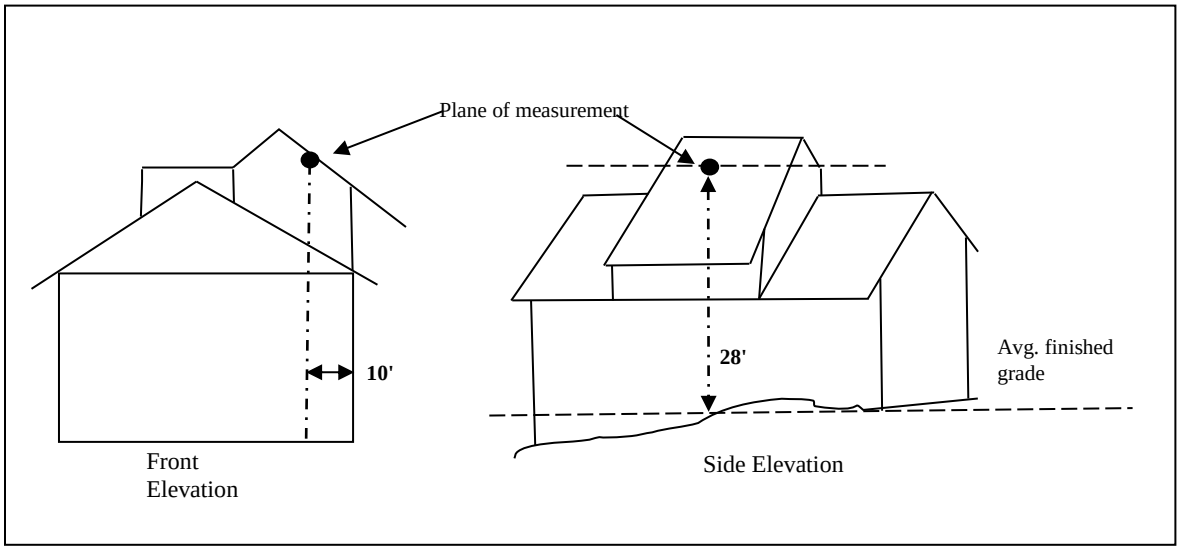

For purposes of calculating the side yard setback, every foot or fraction thereof over a 25 foot height, as measured according to this Subsection, shall increase the setback by one foot. As demonstrated in Figure 130.30.060.B (Example: Building Height Determination for Side Yard Setbacks) above in this Section, the highest point measured, at 28 feet, shall increase the side yard setback by three feet.

C. **Exceptions to Building Height Requirements.**

Chimneys; church spires; elevator, mechanical and stair housings; flag poles; towers; vents; and other similar structures which are not used for human activity may be up to 20 percent higher than the maximum height requirements in all zones where the excess height is not prohibited by Section 130.27.100 (Airport Noise and Safety Contour [-ANS]) in Article 2 (Zones, Allowed Uses, and Zoning Standards) of this Title. The use of towers or similar structures to provide higher ceiling heights for habitable space shall be deemed a use intended for human activity. No such structure shall be employed for any commercial or advertising use unless specifically allowed by the applicable zone, except that antennas and associated equipment may be located within such structures.

130.30.070 Fences, Walls, and Retaining Walls

A. **Measurement of Fence Height.** Fence height shall be measured as the vertical distance between the natural or finished grade at the base of the lowest side of the fence, and the top edge of the fence material, as shown in Figure 130.30.070.A (Example: Fence Measurement) below in this Section:

Figure 130.30.070.A Example: Fence Measurement

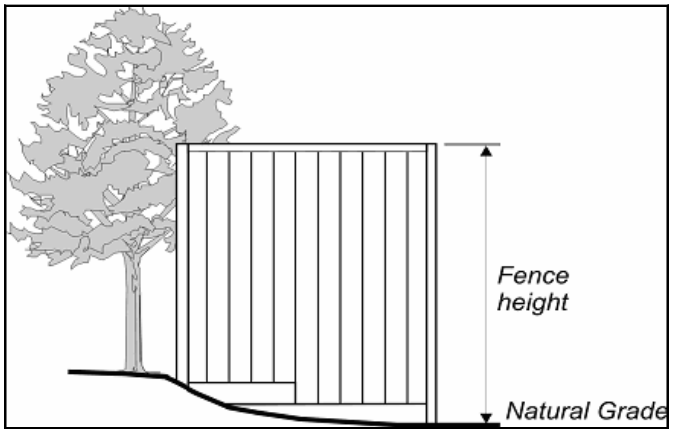

B. **Front Yards.** In all zones and for non-agricultural uses, the following fence and wall requirements shall apply within required front yard setback areas:

1. Fences or walls at least 50 percent open shall be allowed up to a height of seven feet in both primary and secondary front yard setbacks, as determined in Subsection 130.30.050.A.4.a (Double Frontage Corner Lots) above in this Chapter.

2. Fences or walls which are less than 50 percent open shall not exceed 40 inches in height in the primary front yard setback.

3. The setback for a retaining wall greater than 36 inches in height may be reduced by 50 percent where the slope gradient for the front half of the lot exceeds 25 percent, providing:

   a. The exposed height shall not exceed seven feet.

   b. Any fence erected on the top of a retaining wall shall meet the requirements identified in this Section for height, construction, and cross-visibility area (CVA) purposes.

4. Retaining walls that exceed the standards in 3.a above in this Section shall be subject to a Minor Use Permit in compliance with Section 130.52.020 (Minor Use Permit) in Article 5 (Planning Permit Processing) of this Title.

5. Retaining walls necessary to provide site access or that do not exceed 36 inches in exposed height shall not be subject to setback requirements. In addition, such walls may be allowed within public utility easements but not within drainage easements.

6. Fences or walls less than 50 percent open may be allowed up to a height of seven feet in the secondary front yard setback, but not less than 10 feet from the property line, right-of-way, or road easement where the property line is the

center line of the road, subject to the cross-visibility area (CVA) restrictions in Subsections B.7 and B.8 (Front Yards) below in this Section.

7. At a corner formed by any encroachment onto a road, no fence or wall greater than 40 inches in height shall be placed within the CVA consisting of a triangle having two sides 10 feet long, running along the driveway/encroachment edge and the road edge-of-pavement, said length beginning at their intersection, and the third side formed by a line connecting the two ends, as shown in Figure 130.30.070.B (Cross Visibility Area [CVA]) below in this Section (See #1 above in this Section).

8. On corner lots, no fence or wall greater than 40 inches in height shall be placed within the CVA consisting of a triangle having two sides 25 feet long, running along each right of way or road easement, said length beginning at their intersection, and the third side formed by a line connecting the two ends, as shown in Figure 130.30.070.B (Cross Visibility Area [CVA]) below in this Section (See #2 above in this Section):

Figure 130.30.070.B Cross Visibility Areas (CVA)

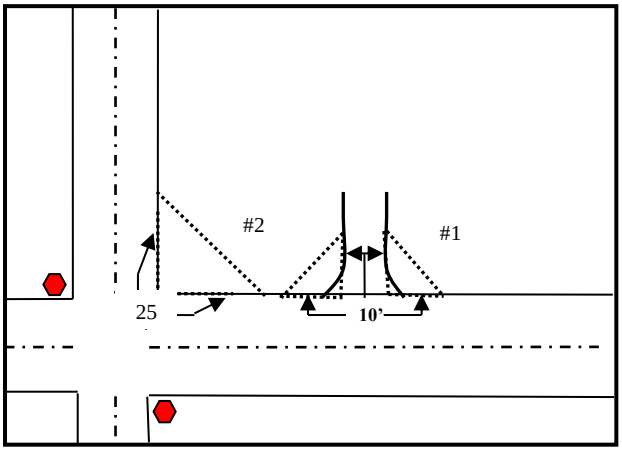

C. **Side and Rear Yards.** In all zones, fences, walls, cut retaining walls, or fences and walls that are erected within five feet of a retaining wall shall be allowed within required side and rear yard setbacks to a maximum cumulative height of seven feet. Fences, walls, or fences and walls that are erected within five feet of a retaining wall such that the cumulative height exceeds seven feet, but does not exceed ten feet in cumulative height, may be allowed subject to the following:

1. Where the height of the fence or fence and wall is more than seven feet above the natural or finished grade of the adjacent property, a signed and notarized statement from the adjacent property owners that the proposed fence or wall, as described or shown in an attached exhibit, will not impact their view nor will it restrict light or movement of air and, therefore, they have no objection to the construction of the fence or wall;

2. Director review of the notarized statement(s) to determine if it adequately represents the adjacent affected property. If such determination is made by the Director, the proposed fence or wall shall be approved through the Administrative Permit process in compliance with Section 130.52.010 (Administrative Permit, Relief, or Waiver) in Article 5 (Planning Permit Processing) of this Title. The Director may require additional notarized statements from neighboring properties if, in his/her opinion, they may be impacted by the fence or wall; and

3. Issuance of a building permit where required by the applicable Building Code (Title 110 – Buildings and Construction, of the County Code of Ordinances).

D. **Agricultural Uses.** On lots that are located in the R1A, R2A, R3A, RE, RL, AG, PA, LA, FR, and TPZ zones, agricultural fencing, as defined in Article 8 (Glossary: see "Agricultural Fencing") of this Title, shall be allowed in any setback area provided it does not exceed 14 feet in height.

E. **Retaining Walls.** For the purposes of calculating fence or wall height, the height of a retaining wall is included in the calculation if the fence or wall is located on top of or within five feet of the retaining wall. A sloped area, if it exists between the retaining wall and the fence or wall shall be included in the height calculations as noted in Figure 130.30.070.C (Example: Retaining Wall/Fence Measurements) below in this Section.

Figure 130.30.070.C Example: Retaining Wall / Fence Measurements

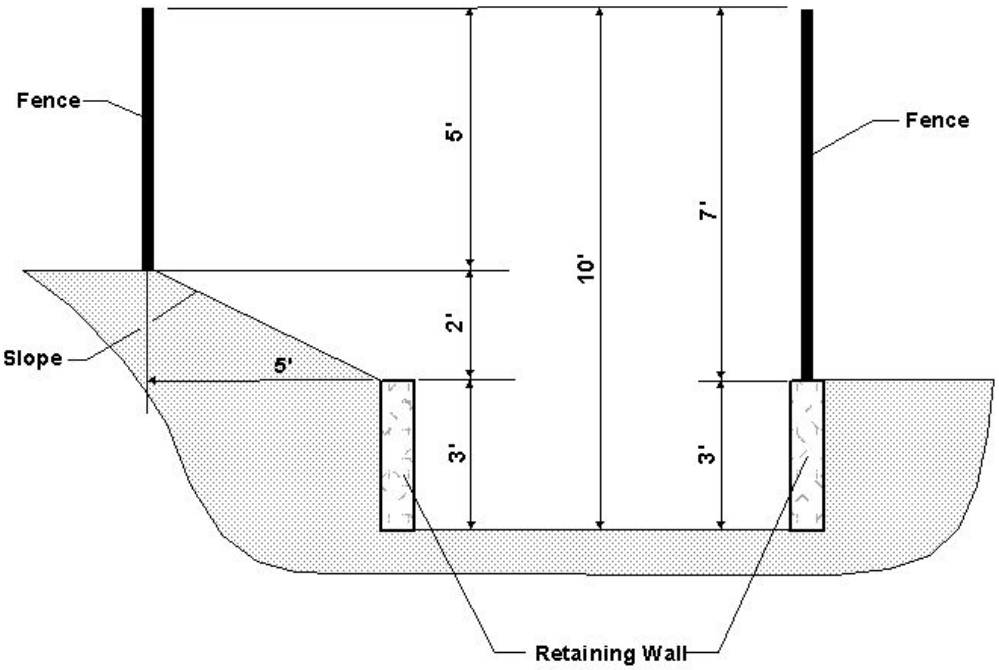

F. Fences shall not be allowed within a road easement or county-maintained right-of-way except as provided below:

1. Gates and decorative entryways to a non-county maintained road system subject to the requirements under Section 130.30.090 (Gates) below in this Chapter;

2. In RE, RL, AG, PA, LA, FR, and TPZ zones, agricultural fencing as defined in Article 8 (Glossary: see "Agricultural Fencing") of this Title, may be located within a county-maintained right-of-way or non-county maintained road easement, provided that the fence is located a minimum of five feet outside of all improved areas, including roadside drainage features and cut or fill slopes. When located within a county-maintained right-of-way or non-county maintained road easement, the property owner shall be required to remove or relocate said fence at the time any work or improvements are being made within the right-of-way or at the County's discretion when necessary to ensure the public health, safety, and welfare.

G. Concertina wire, serpentine wire, barbed wire, razor wire, and other similar fencing materials capable of inflicting significant physical injury shall be prohibited. A Minor Use Permit will be required to allow these materials if it can be demonstrated that the proposed fencing is reasonably necessary to protect persons or property and will not constitute a safety hazard to members of the public conducting themselves in a lawful manner. In no event shall these fencing materials protrude into or over the public right-of-way. These regulations shall not apply to fencing required by court order, or when being used for animal husbandry and/or grazing operations.

H. Fences and walls not located within any of the required setback or cross-visibility areas are limited in height only by the building height limitations of the zone in which they are located.

I. A building permit shall be required, for any fence over seven feet in height, in compliance with Chapter 110.16 (Uniform Building Code) of Title 110 (Buildings and Construction) of the County Code of Ordinances, or as otherwise required by Title 110.

J. Fences or walls shall not exceed the requirements of this Section unless and until a Minor Use Permit is granted in compliance with Section 130.52.020 (Minor Use Permits) in Article 5 (Planning Permit Processing) of this Title.

K. Columns, pilasters, and support structures, and the decorative elements thereon associated with a fence or gate located on or within required setbacks may exceed the height limit provided they meet the following criteria:

1. They do not exceed eight feet in height;

2. They are not located closer than 16 feet on center;

3. The fencing materials do not cumulatively exceed the see-through fence standard, where applicable; and

4. They do not interfere with the cross visibility area (CVA) associated with any street or driveway.

130.30.080 Hillside Development Standards; 30 Percent Slope Restriction

A. **Content.**

This Section contains standards to implement General Plan policies applicable to development within hillside areas. This Section regulates disturbance and development on existing lots containing slope gradients 30percent or greater in all zones, provides for exceptions to allow reasonable use of property, relieve burdens on and promote agricultural production and protect the public health and safety.

Standards applicable to the creation of new lots or modification of existing lots (through the Boundary Line Adjustment process) containing slopes greater than 30 percent are found in the *Hillside Land Use Standards* of the Design and Improvement Standards Manual (DISM)/Land Development Manual (LDM), or successor document. The standards in this Title and the DISM/LDM, or successor document are provided to supplement other applicable regulations by providing additional planning and design tools to enable creative site planning, meeting the challenges of steep terrain, while minimizing the effects of construction on the hillside.

B. **Applicability; Slope Gradient Calculation.**

These standards in this Section shall apply to any development that will result in ground disturbance on any portion of an existing lot with a natural gradient of at least 30 percent (30 feet of vertical distance for every 100 feet of horizontal distance) and a vertical height of at least 50 feet.

The calculation of site gradient shall exclude the following:

1. Artificial slopes created under a permit issued by the County or for which a permit was not required at the time the slopes were created.

2. Slopes designated as open space or non-building areas in a Specific Plan or Planned Development, or protected through an open space designation, slope easement or other similar covenant.

3. Areas of a site outside the area proposed for development, grading or other construction activity.

C. **Development Standards Applicable to Slopes 30 percent or Greater.**

Development that will result in ground disturbance on slopes 30 percent or greater with a vertical height of 50 feet or more shall be prohibited, except where reasonable use of the property would be denied, as provided in Subsection E (Reasonable Use of Existing Lots or Parcels) below in this Section, or the activity is exempt under Subsection D (Exemptions) below.

Any development allowed on slopes 30 percent or greater shall require a grading or building permit and shall include an erosion and sediment control plan in compliance with the County Grading Design Manual.

Where required by the Grading Design Manual, technical studies from qualified professionals, such as soils or geotechnical reports to assess the erosion potential or slope stability may be required. Recommendations for erosion control or slope stabilization measures contained in the technical reports shall be implemented as a requirement of the grading or building permit. A surety bond, cash deposit or other security acceptable to the County may be required to ensure that long term erosion control measures, such as slope landscaping, are permanently established.

D. **Exemptions.**

The following types of development are exempt from the provisions of this Section:

1. Development that will avoid disturbance of slopes 30 percent or greater;

2. Development on slopes with a gradient of 30 percent or greater and a vertical height of 50 feet or less;

3. Construction of public or private streets and roads, emergency vehicle access or driveways;

4. Development approved prior to the adoption of this ordinance which has identified the extent of allowable development. These include approved variances, tentative and final subdivision and parcel maps, planned developments or other actions;

5. Disturbance of existing artificial slopes created under a permit issued by the County or for which a permit was not required at the time the slopes were created;

6. Repair of existing infrastructure, or replacement or repair of existing structures in substantially the same footprint;

7. Disturbance on slopes necessary for public safety, such as removal of poisonous or noxious plants, controlled removal or thinning of vegetation as part of a fire protection program, or other public safety purpose;

8. Development of a public trail comprising a component of the County's regional parks and trails master plans;

9. Projects located in the Tahoe Basin. Such projects are subject to the policies and regulations of the TRPA Code of Ordinances;

10. Underground utilities with accessory above ground components, utility poles and guy wires, and other similar features;

11. Agricultural activities that utilize best management practices (BMPs), as recommended by the Ag Commission and adopted by the Board.

E. **Reasonable Use of Existing Lots or Parcels.**

Where reasonable use of an existing lot or parcel would otherwise be denied, development or disturbance of steep slopes is allowed under the reasonable use criteria in this Section. Reasonable use guidelines are applied based on the type of development proposed. The reasonable use criteria in this Title are not applicable to new subdivisions, or to the modification of existing parcels under the Boundary Line Adjustment process. Standards for new subdivisions or modifications of existing parcels are found in the *Hillside Development Standards* of the Design and Improvement Standards Manual (DISM)/Land Development Manual (LDM), or successor document.

1. **Single Family Residential on Existing Legal Lot.** Development on existing, legally created parcels comprised of slopes that have a gradient of 30 percent or greater is allowed if ground disturbance related to development of the primary structure and any accessory structures and uses meets the following criteria:

   a. **Minimize Area of Disturbance.** The proposed total disturbance area on the parcel, excluding areas for septic systems, domestic water wells and driveways, shall not be greater than the thresholds contained in Table 130.30.080.A (Allowed Disturbance Area for Residential Parcels) below in this Section, based on the parcel size:

Table 130.30.080.A – Allowed Disturbance Area for Residential Parcels

Parcel Size			
Less than 1 acre	**1.0 acre to 1.5 acres**	**1.5 acres to 4.0 acres**	**Greater than 4.0 acres**
35 percent of parcel area	15,000 square feet, plus 14 percent of area over 1 acre	18,000 square feet, plus 12 percent of area over 1.5 acres	32,000 square feet plus 10 percent of the area over 4 acres
All resulting values rounded up to the next 1,000 square feet			

b. **Minimize Grading.** Minimize the impact of grading to the extent feasible through measures such as stepped foundations instead of graded pads, configuration of structures and grading to minimize the impact on natural topographic contours, rounding of cut and fill slopes, and the use of retaining walls to reduce the area of disturbance of slopes 30 percent or greater.

2. **Non-Residential and Multi-Family Residential Development on Existing Legal Lots.** Lands designated for non-residential and multi-family residential are limited in extent and distribution to a small number of parcels, generally within Community Regions and Rural Centers. Development or disturbance of slopes 30 percent or greater will be allowed where:

   a. The proposed use is consistent with the General Plan and Zone designation for the property;

   b. The development or disturbance will not impair the stability of slopes on the property or on surrounding properties;

   c. The development or disturbance will conform to the requirements of the County Grading Ordinance, including best management practices for erosion and sedimentation control;

   d. Design techniques have been utilized, where feasible, to respect natural contours, including rounding of cut and fill slopes to minimize abrupt edges;

   e. The proposed use complies with the development standards of Subsection C (Development Standards Applicable to Slopes 30 percent or Greater) above in this Section.

3. Reasonable use determinations for ministerial projects will be made by the Director or Building Official based on the criteria above. The determination of reasonable use for discretionary projects will be made as part of the discretionary review of the proposed project. The reasonable use determination may be appealed in the manner set forth in Section 130.52.090 (Appeals) in Article 5 (Planning Permit Processing) of this Title.

F. **Reasonable Use Criteria for Placement of Septic Systems on Existing Legal Lots or Parcels.**

General Plan Policy 7.1.2.1 (Erosion/Sedimentation) restricts the placement of septic systems to on steep slopes. Where public or private sewer service is unavailable, septic systems are integral to the development of most structures. Thus, the placement of an effluent disposal field on slopes of 30 percent or greater is considered as part of the reasonable use determination required for the development of parcels with slopes greater than 30 percent.

Septic system components may be located in areas containing slopes greater than 30 percent where alternative locations are not feasible or where the placement would reduce the overall disturbance of slopes. Location of septic system components shall comply with Chapter 110.32 (Private Sewage Disposal Systems) of Title 110 (Buildings and Constructions) of the County Code of Ordinances, and other regulations as determined by the Environmental Management Department. The area of disturbance associated with construction of septic system components is allowed in addition to the reasonable use areas identified above.

130.30.090 Gates

The placement of gates across county-maintained rights-of-way shall be prohibited. The following regulations establish a supplemental review and approval procedure for placing gates across non-county maintained roads or private driveways entering residential and nonresidential development. The regulations in this section do not apply to gates serving agricultural uses.

A. **Single- and Multi-unit Residential Development.** Single- and multi-unit residential dwellings located on one lot are allowed to construct gates across driveways providing the gates are located a minimum of 20 feet from the edge of pavement, will not swing into a county right-of-way or non-county maintained road or alley, are constructed consistent with applicable fire and building codes, and are in compliance with Subsections D.2 to D.5 (Design Standards for Gated Developments), inclusive, and D.9 ("Anti-directional" devices…) below in this Section.

B. **Nonresidential Development.** An Administrative Permit is required, in compliance with Section 130.52.010 (Administrative Permit, Relief, or Waiver) in Article 5 (Planning Permit Processing) of this Title, to establish gates at nonresidential driveway entrances that will prohibit free access/egress to and from the site by either remaining closed during business hours, such as with manned or automatic toll booths, or when being used to prevent public access after close of business. In addition to requirements under Section 130.52.010 (Administrative Permit, Relief, or Waiver), the permit shall be in compliance with Subsections D.1 to D.5 (Design Standards for Gates Developments), inclusive, and D.9 ("Anti-directional" devices at gated entrances…) below in this Section.

C. **Residential Subdivisions.** An Administrative Permit shall be required to establish gates across non-county maintained road(s) within a residential subdivision consisting of two or more lots, including condominium developments. An Administrative Permit to establish gates shall not be approved unless the Director finds all of the following:

1. The gate will not impede public access to a public resource, such as a public park, or interfere with existing or planned traffic circulation patterns; and

2. The project conforms to the standards of Subsection D (Design Standards for Gates Developments) below in this Section.

D. **Design Standards for Gated Developments.** The following standards shall be required in the design of gated developments. Deviation from these standards shall require a Conditional Use Permit in compliance with Section 130.52.021 (Conditional Use Permits) in Article 5 (Planning Permit Processing) of this Title, except where conditions are included in a development plan permit or other project conditions.

1. All Administrative Permits shall be subject to review by the Department of Transportation and the local fire district.

2. Design and location of gates shall be consistent with Title 12 (Streets, Sidewalks, and Public Places) of the County Code of Ordinances.

3. Road widths and gate openings shall conform to the minimum requirements of Title 14 Fire Safe Regulations.

4. At least one lane in each direction shall provide a minimum of 14 feet of unobstructed vertical clearance.

5. Gates shall be equipped with an emergency access lock system (approved by the fire department) that shall consist of a padlock in series on manual gates or a key switch on automatic gates. Automatic gates shall also be equipped with a receiver to allow remote activation by emergency vehicles to the satisfaction of the Sheriff's Department and the applicable fire department. Automatic gates shall be equipped with a mechanical release and a loop system to keep the gate open as long as traffic is passing through, and shall be designed to remain in the unlocked position during a power failure.

6. Gated entrances shall be designed in compliance with the Design and Improvement Standards Manual (DISM)/Land Development Manual (LDM), or successor document as to approach distance between the gate and the road in order to accommodate vehicular stacking, and between the gated entrance and the gate controller to allow vehicles to turn around within the driveway without backing onto the adjacent road.

7. Where entrance gates will create a dead-end road in excess of 150 feet in length, an area shall be provided along said road to allow fire trucks and equipment to turn around. The gradient of the road shall be level enough to allow for safe parking of the emergency vehicle when it is necessary to exit the vehicle for manual gate activation.

8. One pedestrian access shall be provided at each gated entrance to a residential or non-residential development. This requirement does not apply to a gate to a single family residence.

9. "Anti-directional" devices at gated entrances and exits, such as metal spikes that can cause tire damage, are prohibited.

10. Unless already provided for in the recorded Covenants, Conditions & Restrictions (CC&Rs) for the property or subdivision, a maintenance agreement shall be established and recorded for the gated development. The agreement shall identify, and at all times keep in effect, a legal entity responsible for maintaining the gates and associated features.

130.30.100 ***Reserved***

CHAPTER 130.31 – AFFORDABLE HOUSING DENSITY BONUS

Sections:

130.31.010 Content
130.31.020 Definitions
130.31.030 Eligibility for Bonus, Incentives, and/or Concessions
130.31.040 Bonuses, Incentives, and Concessions Allowed
130.31.050 Processing of Requests
130.31.060 Continued Availability
130.31.070 Location of Bonus Units
130.31.080 Time of Construction and Occupancy
130.31.090 Design

130.31.010 Content

As required by California Government Code Section 65915, this Chapter contains provisions to allow a density bonus or other incentives or concessions to developers for the production of housing units affordable to very low, lower, and moderate income households and to senior citizens and/or citizens with disabilities. In offering these incentives, this Chapter carries out the requirements of California Government Code Sections 65915, 65916, and 65917. The regulations set out in this Chapter shall apply to unincorporated areas of the County that are not within the TRPA's jurisdictional area. (Ord. 4816, 2009)

130.31.020 Definitions

As used in this Chapter, the following words and terms shall have the meanings set forth below:

A. "**Affordable housing**" means housing affordable to very low, lower, or moderate income households.

1. "**Very low income household**" means a household that earns less than 50 percent of the area median income for El Dorado County, adjusted for family size and updated annually. This term includes extremely low income households earning less than 30 percent of the area median income for the County, adjusted for family size and updated annually. (See Health and Safety Code (HSC) Section 50105).

2. "**Lower income household**" means a household that earns between 50 and 80 percent of the area median income for the County, adjusted for family size and updated annually. (See HSC Section 50079.5).

3. "**Moderate income household**" means a household that earns between 80 and 120 percent of area median income for the County, adjusted for family size and updated annually. (See HSC Section 50093).

B. "**Density Bonus**" means a density increase over the otherwise allowable maximum residential density under the applicable General Plan designation and Zone District.

C. "**Incentive**" or "**Concession**" represents any of the following:

1. Reduction in site development standards or a modification of zoning code requirements or architectural design requirements that exceed the minimum standards of the Building Code, including, but not limited to, a reduction in the setback and square footage requirements and in the ratio of vehicular parking spaces that would otherwise be required that results in identifiable, financially sufficient and actual cost reductions;

2. Other concessions or incentives of a regulatory nature identified in the County's Incentive Based Affordable Housing policy (Note: policy is in development and not yet adopted by the Board), or proposed by the applicant or the County that result in identifiable, financially sufficient and actual cost reductions.

D. "**Qualifying housing development**" means a single project for five or more residential units constructed within the unincorporated area of the County. For the purpose of calculating a density bonus, the residential units must be on contiguous sites that are the subject of one development application.

E. "**Senior citizen**" means a person 62 years of age or older, or 55 years of age or older in a senior citizen housing development. (See Civil Code Section 51.3).

130.31.030 Eligibility for Bonus, Incentives, and/or Concessions

A. In order to be eligible for a density bonus or other incentive or concession as provided by this Chapter, a proposed qualifying housing development shall consist of five or more residential units, either for rent or for sale and where at least one unit is affordable to very low, lower, or moderate income households.

B. A developer shall be granted a density bonus, incentives and/or concessions described in Section 130.31.040 (Bonuses, Incentives, and Concessions Allowed) below in this Chapter when he or she agrees to provide at least any one of the following:

1. At least five percent of the total number of proposed units for very low income households;
2. At least 10 percent of the total number of proposed units for lower income households;

3. A senior citizen housing development;

4. At least 10 percent of the total number of proposed units in a condominium project, for persons and families of moderate income;

5. The donation of land sufficient in size to allow development of at least 40 affordable housing units consistent with California Government Code Section 65915(h) and Subsection 130.31.040.B (Density Bonus for the Dedication of Land) below in this Chapter;

6. The payment of a fee in lieu of providing affordable housing units as established in this Section and Subsection 130.31.040.D (Affordable Housing In-Lieu Fee) below in this Chapter.

C. In order to be eligible for a bonus, incentive, and/or concession, the applicant shall ensure that all provisions of this Chapter are met.

D. All eligible developments shall comply with the Fair Housing Act that protects all citizens from discrimination on the basis of race, color, national origin, religion, sex, disability, or familial status, such as families with children under the age of 18 living with parents or legal guardians, pregnant women, and people trying to get custody of children under 18 years of age.

E. "Total units" does not include units added by a density bonus in compliance with this Chapter or by any other local policy granting a greater density bonus.

130.31.040 Bonuses, Incentives, and Concessions Allowed

Qualifying housing development projects that satisfy all applicable provisions of this Chapter shall be entitled to a density bonus and additional incentives or concessions as follows:

A. **Density Bonus for Reservation of Affordable Units.** The density bonus allowed by this Chapter shall consist of an increase in the number of dwelling units over the otherwise maximum allowable residential density under the applicable General Plan designation and zone. The amount of density bonus to which an applicant is entitled shall vary according to the amount by which the percentage of affordable housing units exceeds the percentages established in Subsection 130.31.030.B (Eligibility for Bonus, Incentives, and/or Concessions) above in this Chapter. The applicant who requests a density bonus in compliance with this Subsection shall elect which bonus shall be awarded. The density bonus shall be awarded pursuant to the calculations and limitations provided in California Government Code Section 16915(g) for very low, lower, and moderate income units.

B. **Density Bonus for the Dedication of Land.** When an applicant for a subdivision, parcel map, or other residential development project donates land to the County for

the development of affordable housing, the applicant shall be entitled to a density bonus consistent with and subject to the provisions of California Government Code Section 65915(h).

C. **Incentives for Provisions of Child Day Care Centers.** When an applicant proposes to construct a housing development that conforms to Subsection 130.31.030.B (Eligibility for Bonus, Incentives, and/or Concessions) above in this Chapter, and includes a child day care center that will be located on the premises of, either as part of or adjacent to, the project, the County shall grant a density bonus or other incentive consistent with California Government Code Section 65915(i).

D. **Affordable Housing In-Lieu Fee.** If the Board adopts a fee in lieu of providing the affordable housing units established by Section 130.31.030 (Eligibility for Bonus, Incentives, and/or Concessions) above in this Chapter, an applicant may choose to pay said fee in lieu of providing affordable housing.

1. The amount and calculation of the affordable housing in lieu fee and the Affordable Housing Trust Fund Guidelines shall be established by resolution of the Board.

2. The in lieu fee shall be calculated at the time of building permit application. The fee shall be paid at the time of issuance of the building permit, unless proof is provided that the required affordable housing units will be constructed on-site or that an alternative equivalent action was previously approved in accordance with this Chapter.

E. **Conversion of Market Rate Housing.** When an applicant for a qualifying housing development acquires existing market rate dwelling units and enforces price restrictions on the rental or sale of the existing market rate dwelling units in compliance with this Chapter, he/she shall be entitled to a 15 percent increase above the otherwise maximum allowable density under the applicable General Plan designation and zone. The project must be reviewed as to the appropriateness of the conversion from market rate to income restricted units to minimize neighborhood impacts. It may require design upgrades subject to a Design Review Permit (Section 130.52.030, Design Review Permit) in Article 5 (Planning Permit Processing) of this Title, for compliance with current standards and regulations.

130.31.050 Processing of Requests

A. Requests for density bonuses, incentives, and/or concessions shall be made and evaluated through the County's existing permit processes where required, in compliance with Chapter 130.63 (Amendments and Zone Changes) in Article 6 (Zoning Ordinance Administration) of this Title, and Chapter 130.52 (Permit Requirements, Procedures, Decisions, and Appeals) in Article 5 (Planning Permit Processing) of this Title. Where no discretionary permits are otherwise required for a

project, consideration of density bonuses, incentives, and/or concessions shall be made through an Administrative Permit in compliance with Section 130.52.010 (Administrative Permit, Relief, or Waiver) in Article 5 (Planning Permit Processing) of this Title.

B. All requests for density bonuses, incentives, and/or concessions shall be subject to the following:

1. Supporting Information. If regulatory concessions are sought, the developer shall include information with the application, based on building industry standards, to substantiate that any requested waiver or modification of zoning or subdivision standards is necessary to make housing units affordable to very low, lower, or moderate income households.

2. Initial Review. Bonus, incentive, and/or concession requests shall be included as part of the permit application and shall be reviewed by the Director. The Director shall notify the applicant within 30 days of the acceptance of the project permit application as complete, whether the project qualifies for the requested additional density, incentive, and/or concession.

3. Criteria to be Considered. The requested bonus, incentive, and/or concession shall be reviewed for consistency with the General Plan and other applicable County regulations. Particular attention shall be given to application of Housing Element policies and policies addressing the source and distribution of potable water, the type and scale of available wastewater disposal and treatment, and roadway capacity.

4. Findings for Approval.

a. In addition to the findings required for approval of the proposed project, support of a density bonus by the appropriate review authority shall also require the following special findings:

(1) There are sufficient provisions to guarantee that units will remain affordable in the future, consistent with the requirements of Section 130.31.060 (Continued Availability of Affordability) above in this Chapter and the California Government Code Sections 65915(c) and 65915(h)(4).

(2) Adequate evidence exists to indicate that development of the subject property in compliance with a valid permit or entitlement will result in the provision of housing affordable to very low, lower, and moderate income households in a manner consistent with this Chapter.

(3) The number of dwelling units approved by the permit or entitlement can be accommodated by existing and/or planned

infrastructure, consistent with General Plan requirements for concurrency for such services.

b. The County shall grant the requested bonus, concession(s), and/or incentive(s) requested by the applicant unless the County makes a written finding, based upon substantial evidence, of either of the following:

(1) The concession or incentive is not required in order to provide for affordable housing costs, as defined in California Health and Safety Code Section 50052.5, or for rents for the targeted units to be set as specified in California Government Code Section 65915(c); or

(2) The concession or incentive would have a specific adverse impact, as defined in California Government Code Section 65589.5(d)(2), upon health, safety, the physical environment, or any real property that is listed in the California Register of Historical Resources and for which there is no feasible method to satisfactorily mitigate or avoid the specific adverse impact without rendering the development economically infeasible to very-low, lower, and moderate income households. (Ord. 4816, 2009)

130.31.060 Continued Availability of Affordability

A. Affordability shall be based on the following:

1. Affordable Rental Housing is a rental dwelling for which the total monthly expense of rent plus the standard County Housing Authority utility allowance, does not exceed 30 percent of the maximum monthly income limit for very low and low income households in the County as established and updated yearly by the State Department of Housing and Community Development. (California Government Code Section 65915(c)(1)).

2. An Affordable Purchase Price is the sales price at which the affordable unit will be offered to prospective eligible buyers. The monthly housing cost factors required to be included in the calculation of the Affordable Housing Price shall be provided by the County based on the average total monthly housing expenses during the first calendar year of a household's occupancy, including but not limited to property taxes, homeowner’s insurance, homeowner’s association dues, if any, mortgage loan principal and interest, mortgage insurance, and Mello Roos or other applicable assessments, which are equal to or less than one-twelfth) of 35 percent of no greater than 120 percent of Median Family Income, adjusted for Household Size based on an occupancy standard of one-person per bedroom, plus one additional person

(for example, a three-bedroom home will be priced based on the income of a four-person family).

B. The permit application for the development project shall include the procedures proposed by the developer to maintain the continued affordability of all very low, lower, and senior citizen units, as follows:

1. Maintain affordability for at least 30 years for units that were built with the assistance of County funding, including assistance in the forms of contributions to the cost of infrastructure, write-down of land costs, or construction cost subsidization.

2. Maintain affordability as required by the construction or mortgage financing assistance program, mortgage insurance program, or rental subsidy program, typically for a minimum of 30 years.

C. Moderate income condominium or planned development units approved and/or constructed in compliance with this Chapter shall remain affordable for at least 20 years.

1. If such units are sold within the 20 year affordability time frame, the seller of the unit shall retain the value of any improvements, the down payment, and the seller's proportionate share of appreciation.

2. The County shall recapture its proportionate share of appreciation, which shall then be used within three years for any of the purposes promoting home ownership, as described in Health and Safety Code Section 33334.2(e).

D. The developer shall be required to enter into an Affordable Housing Agreement with the County. The Agreement shall delineate those concessions to be made by all parties to ensure that affordable housing can be and is constructed and remains available to the residents for a period of time consistent with Subsections B and C above in this Section. The developer or his/her successor in interest shall not sell, rent, lease, sublet, assign, or otherwise transfer any interests for same without written approval of the County Housing Authority, confirming that the cost of the units will remain consistent with the limits established for the affected density bonus. The Agreement shall also establish specific compliance standards and remedies available to the County upon failure by the developer to make the target units available to intended households.

130.31.070 Location of Bonus Units

Units affordable to very low, lower, or moderate income households constructed in compliance with this Chapter shall be approved under a single development application and be built within one-quarter mile of the boundary of the proposed housing development, unless the County and developer agree to an alternative site for development in the Affordable Housing Agreement.

130.31.080 Time of Construction and Occupancy

Units affordable to very low, lower, or moderate income households must be constructed concurrently with nonrestricted units and shall be made available for occupancy not later than the time at which the first nonrestricted dwelling unit is available for occupancy, unless the County and developer agree within the Affordable Housing Agreement to an alternative schedule for development and occupancy.

130.31.090 Design

Except as provided for in Section 130.31.040 (Bonuses, Incentives, and Concessions Allowed) above in this Chapter, units affordable to very low, lower, or moderate income households shall be built on-site and be dispersed throughout the housing development wherever feasible. In addition, the number of bedrooms of the units affordable to very low, lower, or moderate income households shall be equivalent to the bedroom mix of the nonrestricted units of the housing development unless the County and developer agree within the Affordable Housing Agreement to an alternative mix. The developer may include a higher proportion of units affordable to very low, lower, or moderate income households with more bedrooms. The design and appearance of the units affordable to very low, lower, or moderate income households shall be compatible with the design of the total housing development.

CHAPTER 130.32 – FLOOD DAMAGE PREVENTION

Sections:

130.32.010 Statutory Authorization, Findings of Fact, Content and Methods
130.32.020 Definitions
130.32.030 General Provisions
130.32.040 Administration
130.32.050 Provisions for Flood Hazard Reduction
130.32.060 Variance Procedures

130.32.010 Statutory Authorization, Findings of Fact, Content and Methods

A. **Statutory Authorization.** The legislature of the state has in California Government Code, Sections 65302, 65560, and 65800, conferred upon local governments the authority to adopt regulations designed to promote the public, health, safety, and general welfare of its citizenry. Therefore, the Board does hereby adopt the following floodplain management regulations.

B. **Findings of Fact.**

1. The flood hazard areas of the County are subject to periodic inundation, which could result in loss of life and property, health and safety hazards, disruption of commerce and governmental services, extraordinary public expenditures for flood protection and relief, and impairment of the tax base, all of which adversely affect the public health, safety and general welfare.

2. These flood losses are caused by uses that are inadequately flood-proofed, elevated or otherwise protected from flood damage. The cumulative effect of obstructions in areas of special flood hazards that increase flood heights and velocities also contribute to flood losses.

C. **Content.** This Chapter implements General Plan Policy 6.4.1.1 requiring continued participation in the National Flood Insurance Program in order to promote the public health, safety, and general welfare, and to minimize public and private losses due to flood conditions in specific areas. This Chapter serves to provide legally enforceable regulations applied uniformly throughout the community to all publicly and privately owned land within flood prone areas. These regulations are designed to:

1. Protect human life and health;

2. Minimize expenditure of public money for costly flood-control projects;

3. Minimize the need for rescue and relief efforts associated with flooding and generally undertaken at the expense of the general public;

4. Minimize prolonged business interruptions;

5. Minimize damage to public facilities and utilities such as water and gas mains; electric, telephone and sewer lines; and streets and bridges located in areas of special flood hazard;

6. Help maintain a stable tax base by providing for the sound use and development of special flood hazard areas so as to minimize future blighted areas caused by flood damage;

7. Ensure that potential buyers are notified that property is in a special flood hazard area;

8. Ensure that those who occupy the special flood hazard areas assume responsibility for their actions.

D. **Methods of Reducing Flood Losses.** In order to accomplish its purposes, this Chapter includes regulations to:

1. Restrict or prohibit uses which are dangerous to health, safety, and property due to water or erosion hazards, or which result in damaging increases in erosion, or in flood heights or velocities;

2. Require that uses vulnerable to floods, including facilities that serve such uses, be protected against flood damage at the time of initial construction;

3. Control the alteration of natural floodplains, stream channels, and natural protective barriers, which help accommodate or channel floodwaters;

4. Control the filling, grading, dredging, and other development which may increase flood damage; and

5. Prevent or regulate the construction of flood barriers which will unnaturally divert floodwaters or which may increase flood hazards in other areas.

These regulations take precedence over any less restrictive or conflicting laws, ordinances or codes.

130.32.020 Definitions

Unless specifically defined below, words or phrases used in this Chapter shall be interpreted so as to give them the meaning they have in common usage and to give this Chapter its most reasonable application.

"**A zone**" means Area of 100-year flood where base flood elevations and flood hazard factors have not been determined.

"**A1-A30 zones**" means Area of 100-year flood where base flood elevations and flood hazard factors have been determined.

"**Accessory structure**" means a subordinate building or structure detached from the primary building or structure on the same lot and incidental to the primary building.

"**Accessory use**" means a use which is incidental and subordinate to the primary use of the parcel of land on which it is located.

"**Appeal**" means a request for a review of the Floodplain Administrator's interpretation of any provision of this Chapter.

"**B zone**" means areas between limits of the 100-year flood and 500-year flood; or certain areas subject to 100-year flooding with average depths less than one foot or where the contributing drainage area is less than one square mile.

"**Base flood**" means a flood having a one percent chance of being equaled or exceeded in any given year (also called a "100-year flood"). Base flood is the term used throughout this Chapter.

"**Base flood elevation**" (BFE) means the elevation shown on the Flood Insurance Rate Map for Zones A1-30, that indicates the water surface elevation resulting from a flood that has a one percent or greater chance of being equaled or exceeded in any given year.

"**Basement**" means any area of the building having its floor subgrade (i.e., below ground level) on all sides.

"**Building**" – see "structure".

"**Development**" means any man-made change to improved or unimproved real estate, including, but not limited to buildings or other structures, mining, dredging, filling, grading, paving, excavation or drilling operations, or storage of equipment or materials.

"**Encroachment**" means the advance or infringement of uses, plant growth, fill, excavation, buildings, permanent structures, or other development into a floodplain that may impede or alter the flow capacity of the floodplain.

"**Existing manufactured home park or subdivision**" means a manufactured home park or subdivision for which the construction of facilities for serving the lots on which the manufactured home is to be affixed (including, at a minimum, the installation of utilities, the construction of streets, and either final site grading or the pouring of concrete pads) is completed before the effective date of this Chapter.

"**Expansion to an existing manufactured home park or subdivision**" means the preparation of additional sites by the construction of facilities for serving the lots on which the manufactured homes are to be affixed (including the installation of utilities, the construction of streets, and either final site grading or pouring of concrete pads).

"**Flood, flooding, or floodwater**" means a general and temporary condition of partial or complete inundation of normally dry land areas from:

1. The overflow of inland or tidal waters; or

2. The unusual and rapid accumulation of runoff of surface waters from any source.

"**Flood boundary and floodway map (FBFM)**" means the official map on which the Federal Emergency Management Agency or Federal Insurance Administration has delineated both the special flood hazards areas and the floodway.

"**Flood insurance rate map (FIRM)**" means the official map on which the Federal Emergency Management Agency or Federal Insurance Administration has delineated both the special flood hazards areas and the risk premium zones applicable to the community.

"**Flood insurance study (FIS)**" means the official report provided by the Federal Insurance Administration that includes flood profiles, the Flood Insurance Rate Map, the Flood Boundary and Floodway Map, and the water surface elevation of the base flood. The flood insurance study, FIRMs and FBFMs are on file at the Department, 2850 Fairlane Court, Placerville, California 95667.

"**Floodplain or flood-prone area**" means an area susceptible to floodwater. Also see "Flood, flooding, or floodwater".

"**Floodplain Administrator**" is the community official designated by title to administer and enforce the floodplain management regulations. In El Dorado County, this duty falls on the Director or his/her authorized representative.

"**Floodplain management**" means the operation of an overall program of corrective and preventive measures for reducing flood damage and preserving and enhancing, where possible, natural resources in the floodplain, including but not limited to emergency preparedness plans, flood control works, floodplain management regulations, and open space plans.

"**Floodplain management regulations**" means this Chapter, the remaining Zoning Ordinance, subdivision regulations, building codes, health regulations, special purpose ordinances (such as grading and erosion control) and other applications of police power that control development in flood-prone areas. This term describes federal, state or local regulations in any combination thereof that provide standards for preventing and reducing flood loss and damage.

"**Floodproofing**" means any combination of structural and nonstructural additions, changes or adjustments to structures that reduce or eliminate flood damage to real estate or improved real property, water and sanitary facilities, structures, and their contents. For guidelines on dry and wet floodproofing, see Federal Emergency Management Agency (FEMA) Technical Bulletins TB 1-93, TB 3-93, TB 7-93, and subsequent updates.

"**Floodway**" means the channel of a river or other watercourse and the adjacent land areas that must be reserved in order to discharge the base flood without cumulatively increasing the water surface elevation more than one foot. Also referred to as "Regulatory Floodway".

"**Floodway fringe**" is that area of the floodplain on either side of the "Regulatory Floodway" where encroachment may be permitted.

"**Functionally dependent use**" means a use which cannot perform its intended purpose unless it is located or carried out in close proximity to water. The term includes only docking facilities, port facilities that are necessary for the loading and unloading of cargo or passengers, and ship building and ship repair facilities, and does not include long-term storage or related manufacturing facilities.

"**Highest adjacent grade**" means the highest natural elevation of the ground surface next to the proposed walls of a structure prior to construction.

"**Lowest floor**" means the lowest floor of the lowest enclosed area - see "Basement". An unfinished or flood-resistant enclosure that is usable solely for parking of vehicles, building access or storage in an area other than a basement area, is not considered a building's lowest floor provided it conforms to applicable non-elevation design requirements under Section 130.32.050 (Provisions for Flood Hazard Reduction).

"**Manufactured home**" means a structure, transportable in one or more sections, which is built on a permanent chassis and is designed for use with or without a permanent foundation when connected to the required utilities. For floodplain management purposes, the term manufactured home also includes mobile homes, park trailers, and other similar vehicles placed on a site for greater than one hundred eighty consecutive days. The term "manufactured home" does not include a "recreational vehicle."

"**Manufactured home park or subdivision**" means a lot (or contiguous lots) of land divided into two or more manufactured home lots for rent or sale.

"**Market value**" means the value of the structure shall be determined by estimating the cost to replace the structure in new condition and adjusting that cost figure by the amount of depreciation which has accrued since the structure was constructed.

1. The cost of replacement of the structure shall be based on a square foot cost factor determined by reference to a building cost estimating guide recognized by the building construction industry.

2. The amount of depreciation shall be determined by taking into account the age and physical deterioration of the structure and functional obsolescence as approved by the floodplain administrator, but shall not include economic or other forms of external obsolescence.

Use of replacement costs or accrued depreciation factors different from those contained in recognized building cost estimating guides may be considered only if such factors are included in a report prepared by an independent professional appraiser and supported by a written explanation of the differences."

"**Mean sea level**" means, for purposes of the National Flood Insurance Program, the National Geodetic Vertical Datum (NGVD) of 1929, or other datum, to which base flood elevations shown on a community's Flood Insurance Rate Map are referenced.

"**Modern construction**" means structures for which the "start of construction" commenced on or after April 1, 1986, the initial adoption date of the County's Flood Damage Prevention Ordinance, and includes any subsequent improvements to such structures, pursuant to the Department of Water Resources Guidelines, for floodplain management purposes.

"**Modern manufactured home park or subdivision**" means a manufactured home park or subdivision for which the construction of facilities for servicing the lots on which the manufactured homes are to be affixed, including at a minimum, the installation of utilities, the construction of streets, and either final site grading or the pouring of concrete pads, is completed on or after April 1, 1986.

"**Obstruction**" includes, but is not limited to, any dam, wall, wharf, embankment, levee, dike, pile, abutment, protection, excavation, channelization, bridge, conduit, culvert, building, wire, fence, rock, gravel, refuse, fill, structure, vegetation or other material in, along, across or projecting into any watercourse which may alter, impede, retard or change the direction and/or velocity of the flow of water, or due to its location, its propensity to snare or collect debris carried by the flow of water, or its likelihood of being carried downstream.

"**One-hundred-year flood**" or "100-year flood" means a flood having a one percent chance of being equaled or exceeded in any given year (also called a "base flood").

"**Public safety and nuisance**" as related to Section 130.32.060 (Variance Procedures) of this Chapter, means that the granting of a variance must not result in anything which is injurious

to safety or health of an entire community or neighborhood, or any considerable number of persons, or unlawfully obstructs the free passage or use, in the customary manner, of any navigable lake, or river, bay, stream, canal, or basin.

"**Recreational vehicle**" means a motor home, travel trailer, truck camper, or camping trailer, with or without motive power, originally designed for human habitation for recreational or emergency occupancy with a living area of 320 square feet or less and bearing the state or federal insignia of approval for recreational vehicles.

"**Regulatory floodway**" means the channel of a river or other watercourse and the adjacent land areas that must be reserved in order to discharge the base flood without cumulatively increasing the water surface elevation more than one foot.

"**Remedy a violation**" means to bring the structure or other development into compliance with state or local floodplain management regulations, or, if this is not possible, to reduce the impacts of its noncompliance through such means as protecting the structure or other affected development from flood damages, implementing the enforcement provisions of the Chapter or otherwise deterring future similar violations, or reducing state or federal financial exposure with regard to the structure or other development.

"**Riverine**" means relating to, formed by, or resembling a river (including tributaries), stream, brook, etc.

"**Special flood hazard area (SFHA)**" means an area in a floodplain subject to a base flood. In El Dorado County, it is shown on an FHBM or FIRM, and all subsequent amendments and/or revisions, as Zones A, A1-A9, A14, A24, or B, which are defined under "A zone", "A1-A30 zones" and "B zone".

"**Start of construction**", as defined in Article 8 (Glossary) of this Title and for purposes of this Chapter, includes substantial improvement and other proposed new development. For a substantial improvement, the actual start of construction means the first alteration of any wall, ceiling, floor, or other structural part of a building, whether or not that alteration affects the external dimensions of the building.

"**Structure**" means a walled and roofed building that is principally above ground; this includes a gas or liquid storage tank or a manufactured home.

"**Substantial damage**"

1. Damage of any origin sustained by a structure whereby the cost of restoring the structure to its before-damaged condition would equal or exceed 50 percent of the market value of the structure before damage occurred; or

2. Flood-related damages sustained by a structure on two separate occasions during a 10-year period for which the cost of repairs at the time of each such

event, on the average, equals or exceeds 25 percent of the market value of the structure before the damage occurred. This is also known as 'repetitive loss.'

"**Substantial improvement**" means any repair, reconstruction, or improvement to a structure, the cost of which exceeds 50 percent of the market value of the structure, before the "start of construction" of the improvement. This term includes structures which have incurred "substantial damage" regardless of the actual repair work performed. The term does not include any alteration of a "historic structure" provided the alteration will not preclude the structure's continued designation as a "historic structure."

"**Variance**" means a grant of relief from the requirements of this Chapter which permits construction in a manner that would otherwise be prohibited by this Chapter.

"**Violation**" means the failure of a structure or other development to be fully compliant with this Chapter. A structure or other development without the elevation certificate, other certifications, or other evidence of compliance required in this Chapter is presumed to be in violation until such time as that documentation is provided.

"**Water** surface elevation" means the height, in relation to the National Geodetic Vertical Datum (NGVD) of 1929, North American Vertical Datum (NAVD) of 1988, or other datum, of floods of various magnitudes and frequencies in the floodplains of coastal or riverine areas.

"**Watercourse**" means a lake, river, creek, stream, wash, arroyo, channel, or other topographic feature on or over which waters flow at least periodically. Watercourse includes specifically designated areas in which substantial flood damage may occur.

130.32.030 General Provisions

A. **Application.** This Chapter shall apply to all development in the SFHAs within the jurisdiction of the County.

B. **Compliance.** Violation of the following requirements (including violations of conditions and safeguards) shall constitute a misdemeanor. Nothing herein shall prevent the County from taking such lawful action as is necessary to prevent or remedy any violation.

1. No structure shall hereafter be located, constructed, extended, converted, nor land altered without full compliance with the terms of this Chapter and other applicable regulations.

2. No new critical or high occupancy structures (such as schools and hospitals) shall be located in the 100-year floodplain of any river, stream, or other body of water pursuant to General Plan Policy 6.4.1.3 (Flood Hazards, Development Regulations).

C. **Abrogation and Greater Restrictions.** This Chapter is not intended to repeal, abrogate, or impair any existing easements, covenants, or deed restriction. However, where this Chapter and another ordinance, easement, covenant, or deed restriction conflict or overlap, whichever imposes the more stringent restrictions shall prevail.

D. **Interpretation.** In the interpretation and application of this Chapter, all provisions shall be:

1. Considered as minimum requirements;

2. Liberally construed in favor of the governing body; and

3. Deemed neither to limit nor repeal any other powers granted under state statutes.

E. **Warning and Disclaimer of Liability.** The degree of flood protection required by this Chapter is considered reasonable for regulatory purposes and is based on scientific and engineering considerations. Larger floods can and will occur on rare occasions. Flood heights may be increased by man-made or natural causes. This Chapter does not imply that land outside the special flood hazard areas or uses permitted within such areas will be free from flooding or flood damages. This Chapter shall not create liability on the part of the County, any officer or employee thereof, the State of California, or the Federal Emergency Management Agency for any flood damages that result from reliance on this Chapter or any administrative decision lawfully made hereunder.

F. **Severability.** This Chapter and the various parts thereof are hereby declared to be severable. Should any section of this Chapter be declared by the courts to be unconstitutional or invalid, such decision shall not affect the validity of this Chapter as a whole, or any portion thereof other than the Section so declared to be unconstitutional or invalid.

130.32.040 Administration

A. **Designation of the Floodplain Administrator.** The Director or authorized representative is appointed to administer, implement, and enforce this chapter by granting or denying development permits in accordance with its provisions.

B. **Duties and Responsibilities of the Floodplain Administrator.** The duties and responsibilities of the Floodplain Administrator shall include, but not be limited to the following:

1. **Permit Review.** Review all development permits to determine that:
   a. Permit requirements of this Chapter have been satisfied, including determination of substantial improvement and substantial damage of existing structures;

b. All other required state and federal permits have been obtained;

c. The site is reasonably safe from flooding;

d. The proposed development does not adversely affect the carrying capacity of areas where base flood elevations have been determined but a floodway has not been designated. This means that the cumulative effect of the proposed development when combined with all other existing and anticipated development will not increase the water surface elevation of the base flood more than one foot at any point within El Dorado County; and

e. All Letters of Map Revision (LOMRs) for flood control projects are approved prior to the issuance of building permits. Building permits must not be issued based on Conditional Letters of Map Revision (CLOMRs). Approved CLOMRs allow construction of the proposed flood control project and land preparation as specified in the "start of construction" definition.

2. **Review, Use and Development of Other Base Flood Data.** The Floodplain Administrator shall obtain, review, and reasonably utilize any base flood elevation and floodway data available from a federal agency, such as that provided by the Federal Emergency Management Agency (FEMA) under the Flood Insurance Study for El Dorado County, or state agency or other source, in order to administer Section 130.32.050 (Provisions for Flood Hazard Reduction) below in this Chapter. NOTE: A base flood elevation shall be obtained using one of two methods from the FEMA publication, FEMA 265, "Managing Floodplain Development in Approximate Zone A Areas – A Guide for Obtaining and Developing Base (100-year) Flood Elevations" dated July 1995.

3. **Notification of Other Agencies.** The Floodplain Administrator shall perform the following tasks prior to a County permit being issued if, as the result of the permit issuance, the following physical changes will occur:

a. Alteration or relocation of a watercourse:
   (1) Notify surrounding communities and the California Department of Water Resources;
   (2) Submit evidence of such notification to the Federal Insurance Administration, Federal Emergency Management Agency; and
   (3) Assure that the flood-carrying capacity within the altered or relocated portion of said watercourse is maintained.

b. Base Flood Elevation changes based on Subsection 130.32.050.D (Provisions for Flood Hazard Reduction, Floodways) below in this Chapter:

(1) Submit, or assure that the permit applicant submits, technical or scientific data to FEMA for a Letter of Map Revision (LOMR). Such submissions are necessary so that upon confirmation of those physical changes affecting flooding conditions, risk premium rates and floodplain management requirements are based on current data.

c. Changes in corporate boundaries:

(1) Notify FEMA in writing whenever the corporate boundaries have been modified by annexation or other means, to include a copy of a community map clearly delineating the new corporate limits.

4. **Documentation of Floodplain Development.** Obtain and maintain for public inspection and make available as needed all certifications, records and permits demonstrating compliance with the requirements of this Chapter. In addition, a record of all variance actions, including justification for their issuance, shall be maintained and submitted in the biennial report to FEMA.

5. **Map Determination.** Make interpretations where needed, as to the exact location of the boundaries of the SFHA, where there appears to be a conflict between a mapped boundary and actual field conditions. The person contesting the location of the boundary shall be given a reasonable opportunity to appeal the interpretation as provided in Subsection 130.32.040.D (Appeals) below in this Section.

6. **Remedial Action.** Take action to remedy violations of this Chapter as specified in Subsection 130.32.030.B (Flood Damage Prevention, General Provisions: Compliance) above in this Chapter.

7. **Biennial Report.** Every two years, complete and submit a Biennial Report to FEMA describing the County's progress in the previous two years in implementing floodplain management measures and on its needs for re-mapping and technical assistance. Submission of this report is required as part of the County's participation in the NFIP.

8. **Planning.** Assure the General Plan is consistent with floodplain management objectives herein.

9. **Non-conversion of Enclosed Areas Below the Lowest Floor.** To ensure that the areas below the BFE shall be used solely for parking vehicles, limited storage, or access to the building and not be finished for use as human habitation without first becoming fully compliant with the floodplain management Ordinance in effect at the time of conversion, the Floodplain Administrator shall:

a. Determine which applicants for new construction and/or substantial improvements have fully enclosed areas below the lowest floor that are five feet or higher;

b. Enter into a "NON-CONVERSION AGREEMENT FOR CONSTRUCTION WITHIN FLOOD HAZARD AREAS" or equivalent with the County. The agreement shall be recorded with the County Recorder as a deed restriction. The non-conversion agreement shall be in a form acceptable to the Floodplain Administrator and County Counsel; and

c. Have the authority to inspect any area of a structure below the base flood elevation to ensure compliance upon prior notice of at least 72 hours.

C. **Development Permit Process.** All development that requires a building or grading permit within a SFHA shall comply with the following requirements:

1. In addition to the standard submittal information required under the building and/or grading permit application, the applicant shall provide the following minimum information:

a. Plans in duplicate, drawn to scale, showing:
(1) Location of the regulatory floodway when applicable;
(2) Base flood elevation information as specified in Subsection 130.32.040.B.2 (Review, Use and Development of Other Base Flood Data) above in this Section;
(3) Proposed elevation in relation to mean sea level of the lowest floor (including basement) of all structures; and
(4) Proposed elevation in relation to mean sea level to which any nonresidential structure will be floodproofed, as required in Subsection 130.32.050.A.3.b (Elevation and Floodproofing, Nonresidential Construction) below in this Chapter and detailed in FEMA Technical Bulletin TB 3-93.

b. Certification from a registered civil engineer or architect that the nonresidential floodproofed building meets all applicable floodproofing criteria under Section 130.32.050 (Provisions for Flood Hazard Reduction) below in this Chapter.

c. For a crawl-space foundation, location and total net area of foundation openings as required in Subsection 130.32.050.A.3.c (Elevation and Floodproofing, Flood Openings) below in this Chapter and detailed in FEMA Technical Bulletins 1-93 and 7-93.

d. Description of the extent to which any watercourse will be altered or relocated as a result of proposed development.

e. All appropriate certifications, records and permits demonstrating compliance with the requirements of this Chapter.

D. **Appeals.** The Board shall hear and decide appeals when it is alleged there is an error in any requirement, decision, or determination made by the Floodplain Administrator in the enforcement or administration of this Chapter.

130.32.050 Provisions for Flood Hazard Reduction

A. **Standards of Construction.** In all SFHAs, the following standards are required:

1. **Anchoring.** All new and modern construction and substantial improvement of any structure shall be adequately anchored to prevent flotation, collapse or lateral movement of the structure resulting from hydrodynamic and hydrostatic loads, including the effects of buoyancy.

2. **Construction Materials and Methods.** All new and modern construction and substantial improvement of any structure shall be constructed:

a. With flood-resistant materials and utility equipment resistant to flood damage for areas below the base flood elevation;

b. Using methods and practices that minimize flood damage; and

c. With electrical, heating, ventilation, plumbing and air conditioning equipment and other service facilities that are designed and/or located so as to prevent water from entering or accumulating within the components during conditions of flooding.

3. **Elevation and Floodproofing.**

a. **Residential Construction.** All new and modern construction and substantial improvement of any residential structure shall have the lowest floor, including basement:

(1) In A1-A9, A14 and A24 Zones, at or above the base flood elevation (BFE);

(2) In an A zone, without BFEs specified on the FIRM (unnumbered A zone), at or above the base flood elevation. The applicant shall identify the SFHA and BFE in compliance with Subsection 130.32.040.B.2 (Review, Use and Development of Other Base Flood Data);

(3) Manufactured/mobile homes or Temporary Mobile Home/RV with a Hardship Permit (TMA), placed or substantially improved on a site within any SFHA, shall:

(a) Be elevated on a permanent foundation such that the lowest floor of the dwelling unit is at or above the BFE, as specified on the FIRM or as determined under Subsection 130.32.040.B.2 (Review, Use and Development of Other Base Flood Data), and be securely fastened to an adequately anchored foundation system to resist flotation, collapse, and lateral movement.

Prior to the foundation or set–up inspection approval, the elevation of the lowest floor, as defined, shall be certified by a registered civil engineer or licensed land surveyor, and certified by a County building inspector to be properly elevated. Failure to submit elevation certification shall be cause to issue a stop work order for the project. As-built plans certifying the elevation of the lowest adjacent grade is also required. Such certification and verification shall be provided to the Floodplain Administrator.

b. **Nonresidential Construction.** All new and modern construction and substantial improvement of any nonresidential structure shall either be elevated to conform to Subsection 130.32.050.A.3.a (Elevation and Floodproofing, Residential Construction) above in this Section or:

(1) Be floodproofed, together with attendant utility and sanitary facilities, below the elevation recommended under Subsection 130.32.050.A.3.a (Elevation and Floodproofing, Residential Construction) above in this Section, so that the structure is watertight with walls substantially impermeable to the passage of water;

(2) Have structural components capable of resisting hydrostatic and hydrodynamic loads and effects of buoyancy; and

(3) Be certified by a registered civil engineer or architect that the standards of both Subsections 130.32.050.A.3.a (Elevation and Floodproofing, Residential Construction) or 130.32.050.A.3.b (Elevation and Floodproofing, Nonresidential Construction) above in this Section are satisfied. Such certification shall be provided to the Floodplain Administrator.

c. **Flood Openings.** All new and modern construction and substantial improvements of any structures with fully enclosed areas below the lowest floor (excluding basements) that are usable solely for parking of vehicles, building access or storage, and which are subject to flooding, shall be designed to automatically equalize hydrostatic flood forces on exterior walls by allowing for the entry and exit of

floodwater. Designs for meeting this requirement must meet the following minimum criteria:

(1) For non-engineered openings:

(a) Have a minimum of two openings on different sides having a total net area of not less than one square inch for every square foot of enclosed area subject to flooding;

(b) The bottom of all openings shall be no higher than one foot above grade;

(c) Openings may be equipped with screens, louvers, valves or other coverings or devices provided that they allow the automatic entry and exit of floodwater; and

(d) Buildings with more than one enclosed area must have openings on exterior walls for each area to allow flood water to directly enter; or

(2) Be certified by a licensed civil engineer or architect.

d. **Garages and Low Cost Accessory Structures.**

(1) **Attached Garages.**

(a) A garage attached to a residential structure, constructed with the garage floor slab below the BFE, must be designed to allow for the automatic entry of flood waters; see Subsection 130.32.050.A.3.c (Elevation and Floodproofing, Flood Openings) above in this Section. Areas of the garage below the BFE must be constructed with flood resistant materials; see Subsection 130.32.050.A.2 (Standards of Construction, Construction Materials and Methods) above in this Section.

(b) A garage attached to a nonresidential structure must meet the above requirements or be dry floodproofed. For guidance on below grade parking areas, see FEMA Technical Bulletin TB-6.

(2) **Detached Garages and Accessory Structures.**

(a) "Accessory structures" used solely for parking, limited storage, or other non–habitable use, may be constructed such that its floor is below the BFE, provided the structure is designed and constructed in accordance with the following requirements:

(i) Use of the accessory structure must be limited to non–habitable use;

(ii) The portions of the accessory structure located below the BFE must be built using flood-resistant materials;

(iii) The accessory structure must be adequately anchored to prevent flotation, collapse and lateral movement;

(iv) Any mechanical and utility equipment in the accessory structure must be elevated or floodproofed to or above the BFE;

(v) The accessory structure must comply with floodplain encroachment provisions in Subsection 130.32.050.D (Provisions for Flood Hazard Reduction, Floodways) below in this Section; and

(vi) The accessory structure must be designed to allow for the automatic entry of flood waters in accordance with Subsection 130.32.050.A.3.c (Elevation and Floodproofing, Flood Openings) above in this Section.

(b) Detached garages and accessory structures not meeting the above standards must be constructed in accordance with all applicable standards in Subsection 130.32.050.A (Provisions for Flood Hazard Reduction, Standard of Construction) above in this Section.

e. **Crawlspace Construction.** This Subsection applies to buildings with crawl spaces up to two feet below grade. Below-grade crawl space construction in accordance with the requirements listed below will not be considered basements.

(1) The building must be designed and adequately anchored to resist flotation, collapse, and lateral movement of the structure resulting from hydrodynamic and hydrostatic loads, including the effects of buoyancy. Crawl space construction is not allowed in areas with flood velocities greater than five feet per second unless the design is reviewed by a qualified design professional, such as a licensed engineer or architect;

(2) The crawl space is an enclosed area below the BFE and, as such, must have openings that equalize hydrostatic pressures by allowing for the automatic entry and exit of floodwaters. For guidance on flood openings, see FEMA Technical Bulletin 1-93;

(3) Portions of the building below the BFE must be constructed with materials resistant to flood damage. This includes not only the foundation walls of the crawl space used to elevate the building, but also any joists, insulation, or other materials that extend below the BFE;

(4) Any building utility systems within the crawl space must be elevated above BFE or designed so that floodwaters cannot

enter or accumulate within the system components during flood conditions;

(5) Requirements for all below-grade crawl space construction, in addition to the above requirements, to include the following:

(a) The interior grade of a crawl space below the BFE must not be more than two feet below the lowest adjacent exterior grade (LAG), shown as D in Figure 3 of Technical Bulletin 11-01;

(b) The height of the below-grade crawl space, measured from the interior grade of the crawl space to the top of the crawl space foundation wall must not exceed four feet (shown as L in Figure 2 of Technical Bulletin 11-01) at any point;

(c) There must be adequate drainage system that removes floodwaters from the interior area of the crawl space within a reasonable period of time after a flood event, not to exceed 72 hours; and

(d) The velocity of floodwaters at the site should not exceed five feet per second for any crawl space. For velocities in excess of five feet per second, other foundation types should be used.

B. **Standards for Utilities.**

1. All new and replacement water supply and sanitary sewage systems shall be designed to minimize or eliminate infiltration of floodwaters into the system and discharge from systems into floodwaters.

2. On-site waste disposal systems shall be located to avoid impairment to them, such as soil scouring from flood waters, or contamination from them during flooding.

C. **Standards for Subdivisions and Other Proposed Development.**

1. Creation of new lots which lie entirely within the SFHAs as identified on the most current version of the flood insurance rate maps provided by FEMA is prohibited in compliance with General Plan Policy 6.4.1.4 (Flood Hazards, Development Regulations).

2. New lots which are partially within the SFHAs must have sufficient land available outside the FEMA or county designated SFHAs for construction of dwelling units, accessory structures, and septic systems, while meeting all other required development standards, in compliance with General Plan Policy 6.4.1.5 (Flood Hazards, Development Regulations).

3. All new subdivision proposals and other proposed development, including proposals for manufactures home parks and subdivisions, shall:

   a. Identify the SFHAs and the BFEs.

   b. Identify the elevations of the lowest floors of all proposed structures and pads, if applicable, on the final plans.

   c. If the site is filled above the BFE, the following as-built information for each structure shall be certified by a registered civil engineer or licensed land surveyor and provided as part of an application for a Letter of Map Revision Based on Fill (LOMR-F) to the Floodplain Administrator:
      (1) Lowest floor elevation.
      (2) Pad elevation.
      (3) Lowest adjacent grade.

4. All subdivision proposals shall be consistent with the need to minimize flood damage.

   a. All subdivision proposals and other proposed development shall have public utilities and facilities such as sewer, gas, electrical, and water systems located and constructed to minimize flood damage.

   b. All subdivisions and other proposed development shall provide adequate drainage provided to reduce exposure to flood hazards.

D. **Floodways.**

Since floodways are an extremely hazardous area due to the velocity of floodwaters which carry debris, potential projectiles, and erosion potential, the following provisions apply:

1. Until a regulatory floodway is adopted, no new or modern construction, substantial improvement of any structure, or other development (including fill) shall be permitted within Zones A1-A9, A14 and A24, unless it is demonstrated that the cumulative effect of the proposed development, when combined with all other development, will not increase the BFE more than one foot at any point within the County.

2. Within an adopted regulatory floodway, the County shall prohibit encroachments, including fill, new or modern construction, substantial improvements to any structure, and other development, unless certification by a licensed civil engineer is provided demonstrating that the proposed encroachment shall not result in any increase in flood levels during the occurrence of the base flood discharge.

3. If Subsections 1 and 2 above are satisfied, all new or modern construction, substantial improvement to any structure, and other proposed new development shall comply with all other applicable flood hazard reduction provisions of this Section (130.32.050, Provisions for Flood Hazard Reduction).

130.32.060 Variance Procedures

A. **Nature of Variances.** The issuance of a variance is for floodplain management purposes only. The variance criteria set forth in this Chapter are based on the general principle of zoning law that variances pertain to a piece of property and are not personal in nature. Insurance premium rates are determined by statute according to actuarial risk and will not be modified by the granting of a variance.

In addition to the specific findings found under Section 130.52.070 (Variance) in Article 5 (Planning Permit Processing) of this Title, approval of a variance for floodplain management purposes must not cause fraud on or victimization of the public. In examining this requirement, the approving authority will consider the fact that every newly constructed building adds to government responsibilities and remains a part of the community for 50 to 100 years. Buildings that are permitted to be constructed below the BFE are subject during all those years to increased risk of damage from floods, while future owners of the property and the community as a whole are subject to all the costs, inconvenience, danger, and suffering that those potential risks bring. In addition, future owners may purchase the property, unaware that it is subject to potential flood damage, and could be insured only at very high flood insurance rates.

The long term goal of preventing and reducing flood loss and damage can only be met if variances are strictly limited. Therefore, the variance guidelines provided in this Chapter are more detailed and contain multiple provisions that must be met before a variance can be properly granted. The criteria are designed to screen out those situations in which alternatives other than a variance are more appropriate.

B. **Criteria.** In passing upon requests for variances, the approving authority shall consider all technical evaluations, relevant factors, standards specified in other sections of this Chapter, as well as the:

1. Danger that materials may be swept onto other lands to the injury of others;

2. Danger to life and property due to flooding or erosion damage;

3. Susceptibility of the proposed facility and its contents to flood damage and the effect of such damage on the existing individual owner and future owners of the property;

4. Importance of the services provided by the proposed facility to the community;

5. Necessity to the facility of a waterfront location, where applicable;

6. Availability of alternative locations for the proposed use which are not subject to flooding or erosion damage;

7. Compatibility of the proposed use with existing and anticipated development;

8. Relationship of the proposed use to the comprehensive plan and floodplain management program for that area;

9. Safety of access to the property in time of flood for ordinary and emergency vehicles;

10. Expected heights, velocity, duration, rate of rise, and sediment transport of the flood waters expected at the site; and

11. Costs of providing governmental services during and after flood conditions, including maintenance and repair of public utilities and facilities such as sewer, gas, electrical, and water system, and streets and bridges.

C. **Provisions.**

1. Generally, variances may be issued for new or modern construction, substantial improvement of any structure, and other proposed new development on a lot of one-half acre or less in size adjacent to and surrounded by lots with existing structures constructed below the BFE, providing that the procedures of Sections 130.32.040 (Administration) and 130.32.050 (Provision for Flood Hazard Reduction) above in this Chapter have been fully considered. As the lot size increases beyond one-half acre, the technical justification required for issuing the variance increases.

2. Variances may be issued for the repair or rehabilitation of "historic structures", as defined in Article 8 (Glossary: see "Structure: Historic") of this Title, upon a determination that the proposed repair or rehabilitation will not preclude the structure's continued designation as an historic structure and the variance is the minimum necessary to preserve the historic character and design of the structure.

3. Variances shall not be issued within any mapped regulatory floodway if any increase in flood levels during the base flood discharge would result.

4. Variances shall only be issued upon a determination that the variance is the "minimum necessary", considering the flood hazard, to afford relief.

"Minimum necessary" means to afford relief with a minimum of deviation from the requirements of this Chapter. For example, in the case of variances to an elevation requirement, this means the approving authority need not grant permission for the applicant to build at grade, or even to whatever elevation the applicant proposes, but only to that elevation which the approving authority believes will both provide relief and preserve the integrity of the Ordinance.

5. In addition to the findings under Section 130.52.070 (Variances) in Article 5 (Planning Permit Processing) of this Title, variances shall only be issued upon a determination that the granting of a variance will not result in increased flood heights, additional threats to public safety, or extraordinary public expense; and will not create a nuisance, cause fraud and victimization of the public, or conflict with existing laws or ordinances.

6. Upon consideration of the factors of Subsection 130.32.060.C.1 (Variance Procedures, Provisions) above in this Section and the purposes of this Chapter, the Board may attach such conditions to the granting of variances as it deems necessary to further the purpose of this Chapter.

7. Any applicant to whom a variance is granted shall be given written notice over the signature of the Director that:

    a. The issuance of a variance to construct a structure below the BFE will result in increased premium rates for flood insurance; and

    b. Such construction below the BFE increases risks to life and property. A copy of the notice may be recorded by the Floodplain Administrator in the office of the County Recorder-Clerk and in a manner so that it appears in the chain of title of the affected lot of land.

8. The Floodplain Administrator will maintain a record of all variance actions, including justification for their issuance, and report such variances issued in its biennial report submitted to FEMA.

THIS PAGE INTENTIONALLY LEFT BLANK

CHAPTER 130.33 – LANDSCAPING STANDARDS

Sections:

130.33.010 Content
130.33.020 Applicability
130.33.030 Exemption

130.33.010 Content

This Chapter identifies the use types which require the submittal of landscape plans, subject to the adopted Landscaping and Irrigation Standards (Resolution 198-2015), prior to the issuance of a building permit. Additionally, the Chapter contains landscaping standards to comply with the Water Conservation in Landscaping Act: Model Water Efficient Landscape Ordinance (California Government Code 65591 – 65599).

130.33.020 Applicability

All ministerial and discretionary development for industrial, research and development, commercial, multi-unit residential, civic, or utility uses shall provide landscaping for the areas of a lot that do not include footprints of buildings or structures, sidewalks, driveways, parking lots, decks, patios, gravel or stone walks, other pervious or impervious hardscapes, and other non-irrigated areas designated for non-development (e.g., open spaces and existing native vegetation).

A Water Efficient Landscape Plan, in compliance with the provisions of California Government Code Sections 65591 through 65599 and this Chapter, may be required. The required components of such plan are described in the adopted Landscaping and Irrigation Standards (Resolution 198-2015).

A landscape plan, in compliance with the standards contained in the DISM/LDM, or successor document, shall be required prior to the issuance of any building permit subject to the requirements of this Chapter. Plans shall include a site plan, grading plan, planting plan, irrigation design plan, and all other details and specifications necessary for a complete landscape plan review, on an application form provided by the Department.

130.33.030 Exemption

Commercial uses on agricultural, rural lands and resource zoned land shall be exempt from the requirements of this Chapter; except for the following:

A. A permanent parking lot located adjacent to a public road shall be subject to landscape standards contained in the adopted Landscaping and Irrigation Standards (Resolution 198-2015).

B. A permanent paved parking lot shall be subject to the shade requirements contained in the DISM/LDM, or successor document.

CHAPTER 130.34 – OUTDOOR LIGHTING

Sections:

130.34.010 Content
130.34.020 Outdoor Lighting Standards
130.34.030 Exemptions
130.34.040 Effect on Existing Outdoor Lighting

130.34.010 Content

This Chapter complies with General Plan Objective 2.8.1, providing standards consistent with prudent safety practices for the elimination of excess nighttime light and glare. Outdoor lighting criteria for lighting practices and systems are contained in the adopted Outdoor Lighting Standards (Resolution 199-2015).

130.34.020 Outdoor Lighting Standards

All outdoor lighting shall be located, adequately shielded, and directed such that no direct light falls outside the property line, or into the public right-of-way as illustrated in Figure 130.34.020.1 (Light Source Not Directly Visible Outside Property Perimeter) below in this Section.

Figure 130.34.020.1 - Light Source Not Directly Visible Outside Property Perimeter

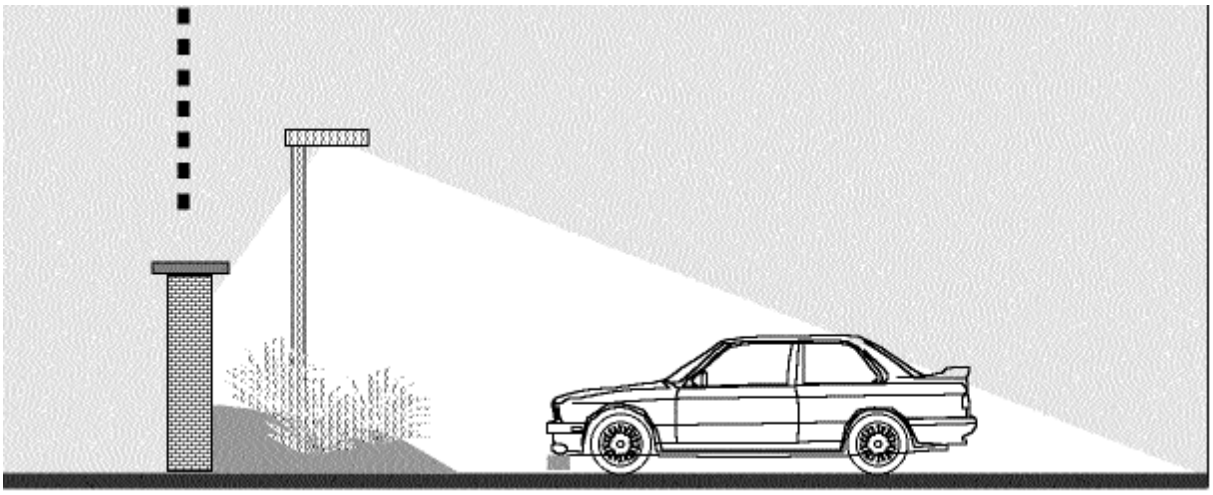

Property Line **Source: Dark Sky Society**

130.34.030 Exemptions

The following lighting shall be exempt from the provisions of this Section:

A. Airport lighting that is required for the safe and efficient movement of aircraft during flight, take off, landing, and taxiing. All other outdoor lighting at airport facilities shall comply with the provisions of this Chapter.

B. Lighting used by law enforcement or other emergency personnel.

C. Lighting used by public agencies for nighttime public works or road construction projects.

D. Lighting used for the illumination of the United States flag subject to the requirements for nighttime illumination of the *United States Flag Code*.

E. Temporary outdoor lighting that is designed to eliminate glare and minimize light pollution as much as possible in compliance with this Chapter. To qualify for this exemption a completed application form for an Administrative or Temporary Use Permit and a site plan shall be provided demonstrating location of proposed fixtures, manufacturer's specification sheets including lamp type, wattage, initial lumen output and shielding, intended use of lighting, and other information as the Director may require.

F. Seasonal or holiday type lighting.

G. Street Lights.

130.34.040 Effect on Existing Outdoor Lighting

Lighting lawfully in place prior to the effective date of this Chapter may remain in use except as provided below:

A. Any nonconforming lighting that is replaced, re-aimed, or relocated must meet the standards of this Chapter.

B. Nonconforming lighting that direct light toward streets in such a manner as to cause potentially hazardous glare to motorists or cyclists shall be either replaced or re-directed so as to meet full-cutoff requirements.

CHAPTER 130.35 – PARKING AND LOADING

Sections:

130.35.010 Content
130.35.020 Definitions
130.35.030 Off-street Parking and Loading Requirements

130.35.010 Content

This Chapter contains standards for off-street parking requirements for residential and non-residential uses. Additional standards for the design for the required parking for new development are found in the adopted Parking and Loading Standards (Resolution 202-2015).

130.35.020 Definitions

"**Active use area (AUA)**" means all developed areas within a building except for storage areas, restrooms, and employee lunchroom/cafeteria(s).

"**Gross floor area (GFA)**". See Article 8 (Glossary)

"**Outside use area (OUA)**" means the total square footage of an area dedicated to the performance of a specific activity, where uses and activities are or may be conducted, including, but not limited to recreational use, retail sales, rentals, and restaurant seating. The OUA excludes the area of walkways, promenades, restrooms, landscaping and parking areas and a nursery dedicated to the growing of plant material or areas related product and equipment storage.

130.35.030 Off-street Parking and Loading Requirements

A. Off-street parking shall be provided in accordance with Table 130.35.030.1 (Schedule of Off-Street Vehicle Parking Requirements) below in this Section, unless otherwise provided in this Chapter. Where a parking requirement results in a fraction of a space, the number of parking spaces required shall be rounded to the nearest whole number.

B. **Uses Not Listed.** Where the parking requirement for a use is not specifically listed in the parking schedule, the parking requirement for that use shall be determined by the Director based on the most similar use or activity for which parking requirements are established.

C. **Combined Uses.** In situations where a combination of uses or activities are developed on a single site, parking shall be calculated for each separate use according

to the parking schedule, except as otherwise provided in standards for shared parking, or for certain accessory uses that are subject to a 50 percent reduction in parking requirements, as noted in the parking schedule.

Table 130.35.030.1 – Schedule of Off-Street Vehicle Parking Requirements

USE TYPE	PARKING SPACE REQUIREMENTS
RESIDENTIAL	
Single dwelling unit, detached	2 per unit
Duplex, triplex	2 per unit
Multi-unit (apartments, townhouses, and condominiums): Studio/1 bedroom . . . . . . 2 or more bedrooms	 1.5 per unit; 2 per unit (minimum 1 covered); plus Guest parking shall be provided for all multi-unit development in the amount of 1 per 4 dwelling units.[1] Guest spaces shall be marked "Reserved for guests" or "Visitor parking".
Mixed Use	See Section 130.40.180.C.6 (Mixed Use Development, Development Standards)
Rooming houses, fraternity/sorority housing, or clubs w/sleeping facilities	1 per bedroom; plus 1 per 8 beds.
Accessory dwelling units: Secondary dwelling, Temporary mobile home	1 per bedroom, up to 2 maximum. May be in tandem with spaces required for primary residence.
Guest house	No additional spaces from that required for the primary residence.
Caretaker, Employee housing	1 per unit
Mobile home park	2 per mobile home space, may be in tandem for each space; plus 1 guest space for every 5 units.
COMMERCIAL	
Animal services: Kennel	1; plus 1 per 5 kennel spaces.

Table 130.35.030.1 – Schedule of Off-Street Vehicle Parking Requirements

USE TYPE	PARKING SPACE REQUIREMENTS
Veterinary clinic	1 per 250 square feet **(sf.)** of active use area **(AUA)** exclusive of kennel boarding area.
Automobile: Sales and rental (For customer and employee use)	1 per 400 sf. of AUA; plus 2 per service bay; plus 1 per 3,000 sf. of **outdoor sales lot**.
Repair and service, vehicle fuel sales	3 per service bay; plus 1 per 400 sf. of office/retail AUA.
Car wash	2 per washing stall; Drive-through stalls may utilize stacking areas with a length of 24 feet **(ft.)** as parking spaces.
Bank, financial institution	1 per 250 sf. of AUA; plus 1 per ATM.
Barber or beauty shop	2 per chair or station.
Bar, drinking establishment	1 per 3 seats or equivalent occupancy; plus 1 per 100 sf. of outdoor use area **(OUA)**; plus 1 per 2 employees on maximum shift.
Building supply and lumberyard	1 per 500 sf. of gross floor area **(GFA)**; plus 1 per 1,000 sf. of OUA.
Equipment rental	1 per 500 sf of GFA; plus 1 per 2,000 sf. of OUA.
Funeral home, mortuary	1 per 4 seats or equivalent occupancy; plus 1 for each vehicle maintained on the premises.
Laundry facilities: Dry Cleaner / Laundry Service (small scale w/o delivery or linen supply services)	1 per 500 sf. of GFA; plus 1 per check stand.
Laundromats (self-service)	1 per 2 washers.
Lodging: Bed and Breakfast	1 per guest room; plus required residential parking. (See Section 130.40.170: Lodging Facilities for additional requirements)

Table 130.35.030.1 – Schedule of Off-Street Vehicle Parking Requirements

USE TYPE	PARKING SPACE REQUIREMENTS
Hotel, motel	1.2 per guest room; plus 50% of the parking requirements for internal, accessory uses where conference facilities, meeting rooms, restaurants, and similar uses are provided as a part of the hotel / motel complex.
Medical services: Hospital	1 per bed based on design capacity. If more than 50 employees on the maximum work shift, 10 percent of required parking shall be designated for carpool/vanpool parking.
Long term care facility	1 per 4 beds based on design capacity.
Nursery, retail	See "Building Supply and lumberyard"
Office: Medical, dental	1 per 200 sf. of AUA.
General	1 per 250 sf. of AUA.
Restaurant and Brewpub: Full service	1 per 300 sf. of dining room area; plus 1 per 2 employees; plus 1 RV space for every 20 parking spaces. When outdoor seating is provided**,** the first 300 sf. of OUA exempt from parking requirements.
With drive-through	1 per 300 sf. of GFA; plus 1 RV space for every 20 parking spaces. Stacking lane shall be provided in compliance with the adopted Parking and Loading Standards (Resolution 202-2015).
Retail sales and service: Food and beverage	1 per 200 sf. of AUA; plus 1 per check stand; plus 1 per 600 sf. of storage area.
Furniture and appliances	1 per 500 sf. of AUA.
General, indoor	1 per 300 sf. of AUA; plus 1 per 600 sf. of storage area.
Shopping center: Neighborhood (less than 15K sf.)	1 per 300 sf. of GFA

Table 130.35.030.1 – Schedule of Off-Street Vehicle Parking Requirements

USE TYPE	PARKING SPACE REQUIREMENTS
Community (15K to 400K sf.)	1 per 400 sf. of GFA
Regional (>400K sf.)	1 per 500 sf. of GFA
CIVIC / CULTURAL	
Church	1 per 4 seats; plus 1 per Sunday school classroom.
Community assembly, including live theater, banquet hall, sports assembly, or other auditoriums and meeting halls	1 per 3 seats, or 1 per 50 sf. of spectator area if seats not fixed.
Library	1 per 2 employees for average day shift staffing; plus 1 per 400 sf. of GFA.
Schools: Child daycare center, preschool, nursery school	1 per 8 children; plus 1 space per 2 employees.
Elementary, middle school	3 per classroom; plus 1 per 250 sf. of office/administration area; plus 1 per 100 sf of auditorium.
High school	10th grade and below: 3 per classroom; plus 1 per 250 sf. of office / administration area; plus 1 space per 100 sf. of auditorium; plus 11th grade and above: Additional 1 space per 3 students 16 years and older.
College	8 per classroom, plus 1 per 35 sf. of auditorium area; or as determined by the review authority.
Specialized education, trade school	1 per 75 sf. of GFA; plus 1 per staff member.
INDUSTRIAL	
Industrial, general and specialized	1 per 500 sf. of indoor AUA; plus 1 per 1,000 sf. of indoor storage area; plus 1 per 2,000 sf. of OUA; plus 1 per 5,000 sf. of outdoor storage area.
Light manufacturing	1 per 400 sf. of AUA.
Research and development	1 per 250 sf. of AUA; plus 1 per 1,000 sf. of indoor storage area; plus 1 per 2,000 sf. of OUA; plus 1 per 5,000 sf. of outdoor storage area.

Table 130.35.030.1 – Schedule of Off-Street Vehicle Parking Requirements

USE TYPE	PARKING SPACE REQUIREMENTS
Resource extraction	No improved parking required providing sufficient usable area is available to accommodate all employee and visitor vehicles on-site.
Storage: Self-storage: w/outdoor access to units by vehicle drive aisles	2 spaces.
w/indoor access to units or no vehicle drive aisle within 20 feet of units	1 space; plus 1 per each 30 units, or fraction thereof.
Wholesale Distribution	1 per 1,000 sf. for first 10,000 sf. of AUA; plus 1 per 3,000 sf. of AUA thereafter.
RECREATIONAL	
Amusement center, arcade	1 per 200 sf. GFA.
Billiard hall	2 per table.
Bowling Alley	4 per lane; plus 50 percent of requirements for each indoor accessory use.
Campground, RV park	1 per campsite; plus 1 per every 3 day users as determined by maximum occupancy under a Conditional Use Permit.
Dance Studio	1 per 200 sf. of AUA, not including waiting room.
Golf course, regulation	4 per hole; plus 1 per driving range tee; plus 50 percent of requirements for each accessory use.
Golf course, miniature	3 per hole; plus 50 percent of requirements for each accessory use.
Health/Fitness club	1 per 300 sf. of AUA; plus 50% of requirements for each accessory use. Pools and tennis/racquetball courts calculated separately.
Marina	1 per 2 boat slips. At least 20% of the spaces shall measure 9ft x 35ft to accommodate vehicles with trailers.

Table 130.35.030.1 – Schedule of Off-Street Vehicle Parking Requirements

USE TYPE	PARKING SPACE REQUIREMENTS
Movie theater (indoor)	1 per 3 fixed seats or equivalent occupancy.
Park	1 per 1,000 sf. of OUA.
Picnic area	1 per table.
Riding stable	1 per 4 stalls. At least 20% of the spaces shall measure 9ft x 35ft to accommodate vehicles with horse trailers.
River put-in and take-out	1 per 3 day users; plus 1 bus parking space (10ft x 30ft) per 56 day users.
Skateboard Park	1 per 1,000 sf. of OUA.
Skating/ice rink	1 per 300 sf. of AUA.
Ski area	1 per 2.5 users based on total ski lift area capacity.
Snow Play Area	1 per 1,000 sf. of OUA.
Special Events: Outdoor	1 per 2.5 people in attendance.
Swimming pool (Public or membership)	1 per 200 sf. of pool area; plus 1 per 500 sf. of deck area.
Tennis courts/Racquetball	2 spaces per court; plus 50% of requirements for each accessory use (i.e. Retail sales area).
Trail Head Parking and Staging Area	As determined by the appropriate review authority.
AGRICULTURAL	
Christmas tree farms (U-cut), U-pick produce farms (fruit, pumpkin patch, etc.)	5 per one acre of crop.
Farm equipment and supply sales; and Nurseries, wholesale	1 per 500 sf. of GFA; plus 1 per 1,000 sf. of OUA.
Packing shed	1 per 1,500 sf. of GFA.
Produce, seasonal sales	1 per 300 sf. of OUA, with a minimum of 3 spaces.

Table 130.35.030.1 – Schedule of Off-Street Vehicle Parking Requirements

USE TYPE	PARKING SPACE REQUIREMENTS
Ranch marketing (see also commercial and recreational uses, above): Bake shop	 1 per 250 sf. of GFA;
Craft sales area	3 per each concession; plus 1 per 200 sf. of AUA.
Winery, brewery (see also commercial and recreational uses, above): Production, laboratory, storage	 1 per 2,000 sf. of AUA; plus 1 per 5,000 sf. of storage.
Tasting Room	1 per 300 sf of AUA; plus 1 per 2.5 people attending marketing events.
Bus/Limo parking (10ft x30ft)	1 space for first 20,000 sf. of winery/tasting room AUA; plus 1 space for each additional 20,000 sf, or fraction thereof.

[1]The approving authority may reduce or eliminate the required number of guest spaces if:
(a) Adequate street parking is available, or
(b) The site is within 500 feet of a transit/bus stop.

TABLE NOTES:

- See special requirements and adjustments for Parking Lot Turnover and Loading Bay Intensity as identified in the Adopted Parking and Loading Standards (Resolution 202-2015).
- Standards contained in this table may be modified by the Special Parking Requirements and Adjustments contained in the DISM/LDM, or successor document.
- A parking plan shall not be required for single family residential developments where all lots will have a minimum of two off-street parking spaces.

CHAPTER 130.36 – SIGNS

Sections:

130.36.010 Content and Applicability
130.36.020 General Sign Requirements
130.36.030 Exemptions
130.36.040 Permanent Signs
130.36.050 Temporary Signs
130.36.060 Community Sign Programs
130.36.070 Sign Development and Design Standards
130.36.080 Permit Requirements and Review Procedures
130.36.090 Prohibited Signs
130.36.100 Illegal, Abandoned, and Nonconforming Signs
130.36.110 Signs on County Property
130.36.120 Definitions

130.36.010 Content and Applicability

Content. This Chapter pertains to the regulation of signs and supersedes all previously adopted standards and ordinances regarding signs, and applies prospectively only. The purpose of this Chapter is to establish sign regulations that are consistent with the goals, objectives and policies of the El Dorado County General Plan and the County's visual and aesthetic goals, and provide adequate identification for establishments. Specifically, this Chapter regulates the size, quantity, and location of signs to maintain and enhance the visual appearance of the County (Goal 2.7), regulates the location, number and size of highway signs and, to the extent allowable by law, eliminates billboards along identified scenic and historic routes (Objective 2.7.1). The Sign Ordinance shall include design review for signs within the foreground and background of the designated scenic corridors commensurate with the goal of scenic corridor viewshed protection (Policy 2.1.1.1).

Applicability. This Chapter applies only to the unincorporated areas of the County; within such areas, this Chapter applies to signs located or mounted on private property, as well as County owned properties and land owned by public entities over which the County has land use regulatory authority. This Chapter does not apply to lands subject to the regulatory authority of the Tahoe Regional Planning Agency. For the purposes of this Chapter, Community Region sign regulations established herein shall apply to those areas designated in the County General Plan Land Use Diagram as Community Regions. Similarly, rural sign regulations established herein shall apply to all other areas in the unincorporated County not otherwise designated as Community Regions in the County General Plan Land Use Diagram. Unless otherwise noted, sign regulations in this Chapter shall apply to both Community Regions and rural areas equally.

The County recognizes that signs are an essential element of a community's visual appearance and provide a means to identify communities and promote commerce, provide useful information to the public, and should not become visual distractions along public roadways.

These regulations are intended to protect the public health, safety, and welfare and provide for the integrity of the County's aesthetics.

In addition, these regulations are intended to:

A. Promote economically stable and visually attractive communities within the County;

B. Promote signs that are attractive, pleasing, and harmonized with the physical character of the structure and environment of surrounding properties;

C. Recognize the distinct signage needs and applications in the County's designated Community Regions and rural areas through distinct sign regulations;

D. Prevent an inadvertent favoring of commercial speech over noncommercial speech or favoring of any particular noncommercial message over any other noncommercial message;

E. Protect viewsheds in designated scenic corridors;

F. Encourage individuality among communities and businesses through signage;

G. Encourage consolidation of signs to reduce visual clutter;

H. Improve traffic safety and the smooth and efficient flow of pedestrians, bicyclist and vehicles to their destinations; and

I. Direct persons to various activities and enterprises, in order to provide for maximum public convenience.

130.36.020 General Sign Requirements

Except as otherwise specifically noted herein, the following requirements shall apply to all signage in the unincorporated Community Regions and rural areas of the County.

A. **Regulatory Interpretations**. The requirements of this Chapter shall not be interpreted to nullify any easements, covenants, or other private agreements that provide for more restrictive sign regulations than are required by this Chapter.

B. **Message Neutrality**. In adopting this Chapter, the County intends to regulate signs within the scope of this Chapter in a way that does not favor commercial speech over noncommercial speech and does not regulate noncommercial speech based on message content. The message of any sign shall not be reviewed except to the minimum extent necessary to identify the type of sign.

C. **Message Substitution**. Subject to the property owner's consent, a constitutionally protected noncommercial message of any type may be substituted in whole or in part for the message displayed on any sign for which the sign structure or mounting device

is authorized in compliance with this Chapter, without consideration of message content. Such substitution of message may be made without any additional approval or permitting. This provision is to prevent any inadvertent favoring of commercial speech over noncommercial speech or favoring of any particular protected noncommercial message over any other protected noncommercial message. In addition, any on-site commercial message may be substituted, in whole or in part, for any other on-site commercial message, provided that the sign structure or mounting device is authorized in compliance with this Chapter, without consideration of message content.

This provision does not create a right to increase the total amount of signage on a parcel, lot, or land use; does not affect the requirement that a sign structure or mounting device be properly permitted; does not allow a change in the physical structure of a sign or its mounting device or location; does not allow for the substitution of an off-site commercial message in the place of an on-site commercial or noncommercial message, and does not authorize the conversion of an existing sign to general advertising for hire.

D. **On-Site/Off-Site Distinction**. Within this Chapter, the distinction between on-site and off-site signs applies only to commercial messages.

E. **Community Region/Rural Distinction**. Within this Chapter, Community Region sign regulations shall apply to those areas designated as Community Regions on the County General Plan Land Use Diagram. Rural sign regulations shall apply to areas in the unincorporated County not otherwise designated as Community Region in the County General Plan Land Use Diagram. Unless otherwise noted, sign regulations in this Chapter shall apply to both Community Regions and rural areas equally.

F. **General Prohibition**. Permanent signs not expressly allowed by this Chapter are prohibited.

G. **Exceptions to Limitations.** Any exception to the limitations and/or sign development standards stated or shown within this Chapter shall require a Variance in compliance with Section 130.52.070 (Variance) in Article 5 (Planning Permit Processing) of this Title. However, consideration of the Variance request shall not evaluate the message or graphic design of the sign.

130.36.030 Exemptions.

The following sign types are expressly exempted from the Planning Sign Permit requirements of this Chapter but must satisfy any and all other applicable permit requirements when applicable (e.g., Building, Electrical, Plumbing, Grading, Encroachment). Except as otherwise specifically noted herein, these exemptions shall apply in all unincorporated Community Regions and rural areas of the County.

A. **Exempt Signs Without Limitations**. The following signs are exempt from Sign Permit requirements with no specific limitations:

1. Conforming signs that change messages, but do not alter the size, location, or illumination. This provision does not authorize the conversion of an existing legal sign to a general advertising for hire use or to a digital display.

2. All devices which are excluded from the definition of a "sign" as set forth in this Chapter.

3. Official traffic signs or other municipal governmental signs, legal notices, advertisements and notices prescribed by law and placed by governmental entities, and signs indicating the location of buried utility lines or any notice posted by a governmental officer in the scope of his or her duties.

4. Direction, warning, or information signs or structures required or authorized by law, or by federal, state, county, or county authority, including, but not limited to, traffic control signs (e.g., stop, yield), highway route number signs, and construction zone or site signs.

5. Noncommercial utility company signs identifying cables, conduits, and dangerous situations.

6. Street address signs on structures and building identification signs consistent with the County-adopted building code or relevant provisions of the County Municipal Code. Notwithstanding anything in this Section, street address signs may be illuminated and may contain reflective paint or material.

7. Tablets and plaques installed by the County, or by a state, federal, or county recognized historical organization exempt from federal taxation under section 501 of USC Title 26 (IRS Code), or signs authorized and installed by county, state or federal agencies on public owned lands.

8. Motor vehicle fuel pricing signs, as required by state law, which identify the brand, types, octane rating, etc., of motor vehicle fuel for sale within the County (Sections 13470 and 13530 of the Business and Professional Code). This does not limit the approval and design requirement for permanent or temporary placement and approval provisions listed herein.

9. Vehicle signs on currently registered and operable vehicles and vessels, including license plates, license plate frames, registration insignia, noncommercial messages, messages relating to the establishment for which the vehicle or vessel is an instrument or tool (not including general advertising, such as mobile billboards), and messages relating to the proposed sale, lease, or exchange of the vehicle or vessel.

10. Signs and advertising located upon the buses, vehicles and bus shelters of the El Dorado Transit Authority.

11. Signs on California State Park Lands in conformance with the standards enforced by the State of California as set forth in the Department of Parks and Recreation Sign Handbook, 1973, as amended.

12. Signs on National Forest lands, including sites permitted for private use, in conformance with the standards enforced by the U.S. Forest Service as set forth in the Forest Service Catalog of Posters and Signs, EM-7100-15, as amended.

B. **Exempt Signs With Limitations**. The following signs are exempt from Sign Permit requirements, provided that they meet the size, height, duration, and/or maximum number limitations listed below. Exempt signs that do not meet the limitations listed may be allowed only by Variance as outlined in Section 130.52.070 (Variance) in Article 5 (Planning Permit Processing) of this Title.

1. Window signs that do not exceed 25 percent coverage of any window. Window signs do not count toward cumulative allowable sign area. Window signage shall be placed so that law enforcement personnel have a clear and unobstructed view of the interior of the establishment, including any cash registers.

2. Temporary signs in conformity with Section 130.36.050 (Temporary Signs) below in this Chapter.

3. Flags, not subject to the standards set forth in Table 130.36.050.1 (Allowed Temporary On-Site Sign Standards) below in this Chapter, shall meet the following requirements:

   a. Flag poles shall be located outside of the public right-of-way.

   b. The maximum height for flag poles is 30 feet.

   c. The maximum size for any one flag is 30 square feet.

4. Signs on property undergoing construction or remodeling not exceeding 32 square feet each in area and limited to 1 sign for each street frontage. Such signs shall not be illuminated. Such signs shall be removed within 30 days of the earliest of the following events: final building inspection approval, issuance of a valid certificate of occupancy, opening for business to the public, or expiration of the Building Permit.

5. Signs warning against trespass, hunting or shooting on the premises not to exceed 2 square feet per sign and spaced approximately 200 feet apart or closer in some instances when warranted (e.g., at a curve or near roads/trails).

6. Signs on property that is currently offered for sale, lease, or rental:

a. On single-family home and improved multi-family property for 2 to 4 units, 1 sign not exceeding 8 square feet and not exceeding a height of 5 feet. Up to 4 signs to direct traffic to the subject property are allowed, provided each sign does not exceed 8 square feet in area and 3½ feet in height. A sign shall not be placed on a sidewalk or street or Public Right-of-Way. A sign shall not create a safety hazard. Such signs shall not be illuminated.

b. On nonresidential and residential property suitable for investment and development, and agricultural and resource-zoned property, 1 sign per street or road frontage, not exceeding 32 square feet in area and 12 feet in height. The sign shall not be illuminated.

7. Signs on private property where there is a garage, yard, or estate sale taking place. Such signs may be posted for no more than 48 hours and must be removed at the end of the sale. A maximum of 6 square feet is allowed per sign.

8. On-site directional signs, such as exit, entrance, or other on-site traffic directional signs, the maximum height of any directional sign shall not exceed 42 inches and the maximum size shall not exceed 6 square feet within designated Community Regions under 3,000-foot elevation of the County. Within the designated rural areas, the maximum height of any on-site directional sign shall not exceed 12 feet and the maximum size shall not exceed 32 square feet. Within Community Regions above 3,000-foot elevation, rural area height limit shall apply. In both Community Regions and rural areas of the County, no advertising or message other than for traffic direction shall be displayed on the signs authorized by this subsection.

9. Off-site commercial directional signs on private property within the designated rural areas of the County, for establishments that are not directly abutting County roads. For establishments that solely derive access from a private road, each establishment is allowed 1 non-illuminated commercial directional sign with a maximum sign area of 16 square feet and a maximum height of 12 feet at the intersection of the private road with the county road. Additional commercial directional signs are allowed for the establishment at other intersecting points along the private road to provide guidance to the establishment. Each additional commercial directional sign shall have a maximum allowed area of 12 square feet and a maximum height of 12 feet. Such signs may be permanent or temporary and require property owner consent. This provision does not allow general advertising for hire.

10. Temporary signs displaying noncommercial messages subject to:

a. 6 square feet of signage, set back at least 5 feet from the public right-of-way and not projecting above the roofline of any structure.

b. During the time period beginning 90 days before a special, general, or primary election and ending 2 weeks after such election, the total allowed sign area for noncommercial messages may be 32 square feet in area. The same setback and height restrictions listed above shall apply to this additional area.

c. Such signs shall be non-illuminated.

11. Home Occupation signs identifying authorized home business activities on site. All signs shall be non-illuminated, compatible in design with existing residential structures, and consistent with the sign development and design standards as listed on Table 130.36.070.3 (Sign Standards for Home Occupation Signs) below in this Chapter.

130.36.040 – Permanent Signs.

A. **Permanent On-Site Signs.** Permanent on-site signs allowed in the County's zoning districts include the following sign types:

1. **Building-Attached Signs**. Allowed permanent on-site signs attached to a structure include wall signs, projecting signs, awning or canopy signs, under canopy signs, and roof signs on non-residential structures within the designated rural areas of the County, consistent with the standards listed in Table 130.36.070.2 (Rural Area Signage Standards for Permanent On-Site Signs) below in this Chapter.

2. **Freestanding Signs**. Allowed permanent freestanding signs include monument and pylon signs. Permanent on-site signs shall be consistent with the sign design and developments standards as described in this Chapter and shown on Tables 130.36.070.1 and 130.36.070.2 (Signage Standards for Permanent On-Site Signs, Community Region and Rural Area, respectively) below in this Chapter.

3. **Menu/Order Board Signs for Drive-In and Drive-Through Uses**. Menu/order board signage shall be consistent with the sign design and developments standards as described in this Chapter. No alterations or additions (e.g., rider signs) along the exterior of the menu/order board sign are allowed.

4. **U.S. Highway 50-Oriented Signs**. Signs on properties within 100 feet of the edge of the right-of-way of U.S. Highway 50 that are outside of the designated State Scenic Highway Corridor. (Note: Designated State Scenic Highway Corridors in El Dorado County shall be subject to special sign regulations under the reserved Section 130.27.070 (Design Review - Scenic Corridor (-DS) Combining Zone) in Article 2 (Zones, Allowed Uses, and Zoning Standards) of this Title.

Permanent on-site signs shall not be used as general advertising for hire.

130.36.050 – Temporary Signs.

Temporary signs may include, but are not limited to, commercial signs (including sign twirlers) for grand openings, products/services, sales, special events, and new apartments/multi-family units. All temporary signs must comply with the standards listed in Table 130.36.050.1 (Allowed Temporary On-Site Sign Standards) below in this Section and are subject to the conditions herein.

A. **Time Duration.** Display periods for temporary on-site signs shall be limited to a cumulative maximum of 90 days per establishment per calendar year, unless otherwise specified below.

1. **Apartment Signs**. Signs at new or substantially renovated apartments shall be removed 6 months from opening.

2. **Banner Signs**. All banner signs (including feather banners) utilized for grand opening events shall be limited to a maximum of 30 consecutive days per establishment per calendar year.

3. **A-Frame Signs, Feather Banners and Sign Twirlers**. When allowed, A-frame signs, feather banners and sign twirlers shall be allowed only on-site during daylight hours and shall be removed from dusk to dawn and during all times when the establishment is closed or event is over.

B. **Illumination.** Temporary signs shall not be illuminated.

C. **Message.** Temporary signs displaying a commercial message shall be limited to on-site signage only. Off-site signage displaying a commercial message shall not be allowed, except as noted in Section 130.36.030.B.9 (Exempt Signs With Limitations) above in this Chapter.

D. **Illegal Signs.** Illegal temporary signs shall be removed immediately.

Table 130.36.050.1 - Allowed Temporary On-Site Sign Standards

Sign Type	Number Allowed	Max. Area	Max. Height	Minimum Setback from Right-of-Way [1]
On-Site Subdivision and Apartment Signs [1]				
Banner	3	30 sf each	Roofline	5 feet
Feather Banner	1 per subdivision	30 sf	12 feet	5 feet
Entrance	1 per subdivision entrance	80 sf each	15 feet	5 feet
Model Home	1 per model home	8 sf	2 feet	5 feet
Flags	5 poles per street frontage, max 15 poles per subdivision	20 sf per pole	25 feet	5 feet
Sign Twirler	1 per subdivision entrance; on legal parcel of subdivision	12 sf	8 feet	5 feet
All Other Uses [1]				
Banner	1 sign (any type) per establishment per street frontage	50 sf	Roofline	5 feet behind face of curb, outside of right-of-way
Feather Banner		30 sf	12 feet	
A-Frame		8 sf	4 feet	
Sign Twirler	1 per establishment; on legal parcel of establishment	12 sf	8 feet	5 feet

Notes
[1]Must be located outside of the required cross visibility area.

130.36.060 – Community Sign Programs.

The Board is the decision-making authority for all new Community Sign Programs. Program descriptions are outlined below.

A. **Community Directional.** Community directional sign programs generally include signs to direct residents and visitors to points of interest, recreational areas, and tourist industries in the County. Where applicable, the use of pylon signs shall be required in higher density use areas to reduce sign clutter. Specific development and design details will be considered and decided by the Board of Supervisors.

B. **Community Identity.** Community identity sign programs shall establish a means for individual communities within the County to designate their name at main point(s) of entry to their community. Such signage can be unique to each community as a means to define their character, quality, or historic contribution to the County. The community identity sign program is limited to monument signs. Specific development and design details will be considered and decided by the Board of Supervisors.

C. **Community Events.** Community event sign programs are limited to identified sites for the display of event signs including; street banners, signs, or other displays for any civic or public events/activities. Site location and specific development and design details will be considered and decided by the Board of Supervisors. Signs may be allowed to be displayed up to 30 days prior to the event and shall be removed within 3 days after the event has ended.

D. **Industry Association Signs.** Industry association sign programs shall establish directional and identifying agricultural industry association signs such as those offered by the El Dorado County Farm Bureau, Farm Trails, Apple Hill Growers Association, El Dorado Winery Association and similar groups. Specific development and design standards will be considered and decided by the Board of Supervisors.

130.36.070 – Sign Development and Design Standards.

This Section establishes standards for sign development and design, including but not limited to: methods for measuring sign size, area and height, sign placement, construction, design, illumination, maintenance, and removal. Unless otherwise specified in this section, sign development and design standards shall apply to all signs within the unincorporated Community Regions and rural areas of the County.

A. **General Sign Design Requirements for Permanent Signs**. Permanent Signs shall comply with the following general design requirements as well as design standards applicable to specific types of signs listed herein in Subsection 130.36.070.K (Standards for Permanent On-Site Signs) below in this Section.

1. **Design Compatibility with Structure.** Signs shall be compatible in architectural scale and bulk with the architectural style of the main structure or structures on the site where the sign is located. The applicant shall incorporate

construction materials, color, letter style, and other design details in designing an architecturally compatible sign. Multiple signs on any structure, or on structures within the same development, shall have the same primary type of building-attached sign.

2. **Sign Illumination.** The artificial illumination of signs, from either an internal or external source, shall be designed to prevent the casting of stray light on surrounding rights-of-way and properties. All illuminated signs shall comply with the following:

   a. External light sources shall be directed toward the sign and fully shielded to limit direct illumination of any object other than the sign.

   b. The light from an illuminated sign shall not be of an intensity or brightness that creates glare or other negative impacts on residential properties in direct line of sight to the sign.

   c. Unless otherwise allowed by another provision of this Chapter, signs shall not have blinking, flashing, or intermittent lights or other illumination devices that have a changing light intensity, brightness, or color.

   d. Colored lights shall not be used at a location or in a manner so as to be confused or interpreted as traffic control devices.

   e. Light sources shall utilize energy-efficient fixtures compliant with Title 24 of the California Code of Regulations.

B. **Sign Area Measurement Procedures**. The sign area is determined by the shape of the sign. For signs that are not four-sided, the sign area is the available display area. For example, for the star-shaped logo sign shown in Figure 130.36.070.A (Star Shaped Sign Area) below in this Section, the sign area is the shaded area within the star shape. For irregularly shaped signs or signs with cursive individual letters, the area of the sign may be calculated by using multiple geometric shapes (see Figure 130.36.070.B (Irregularly Shaped Sign Area) below in this Section. In determining the area of an individual sign that has more than 1 face (e.g., a monument or projecting sign), the single sign face with the greatest area shall be used.

1. **Sign Area Examples**.

Figure 130.36.070.A Star Shaped Sign Area

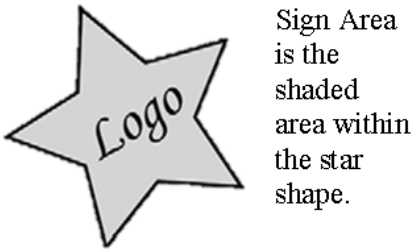

Figure 130.36.070.B Irregularly Shaped Sign Area

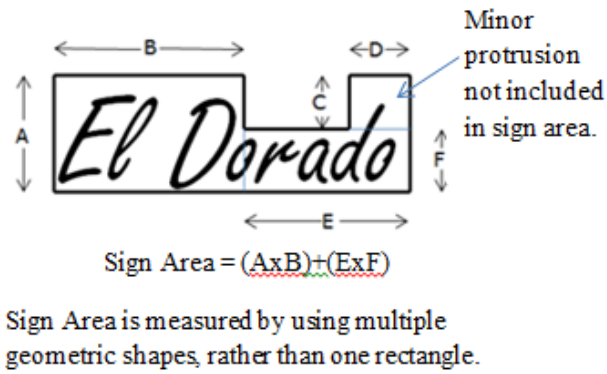

2. **Awning, Canopy, Push Pin, and Channel Letter Sign Area**. Sign area for copy which is applied to an awning, canopy, or as separate lettering onto the building face shall be computed at 100 percent of the area within a single parallelogram enveloping the sign copy.

3. **Freestanding Sign Area**. Freestanding sign area is to be computed as total height by the total length of the sign face for 1 side regardless if it is single- or double-face, excluding structural or architectural framework with no sign copy. See Figure 130.36.070.C (Freestanding Sign Area) below in this Section.

Figure 130.36.070.C Freestanding Sign Area

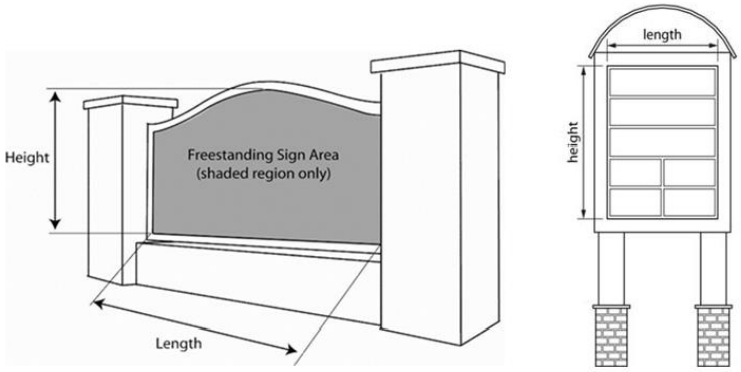

4. **Three-Dimensional Objects**. Where a sign consists of 1 or more three-dimensional objects (e.g., balls, cubes, clusters of objects, sculptures, or statue-like trademarks or symbols), the sign area shall be measured as their maximum visible surface area from any vantage point. See Figure 130.36.070.D (Area of Three-Dimensional Objects) below in this Section.

Figure 130.36.070.D Area of Three-Dimensional Objects

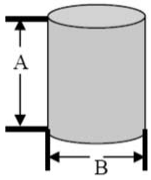

TOTAL AREA = (A) x (B)

C. **Sign Height Measurement**. Sign height shall be measured from the ground, adjacent to the sign, to the top of the sign and support structure. If the ground under the sign slopes, the height shall be measured from the average grade under the sign itself.

D. **Construction Requirements**. Every sign and all parts, portions, and materials thereof shall be manufactured, assembled, and erected in compliance with all applicable state, federal, and county laws and regulations, including the locally adopted building code. All signs shall comply with the following criteria:

1. All transformers, equipment, programmers, and other related items shall be screened and/or painted to match the structure or shall be concealed within the sign.

2. All permanent signs shall be constructed of quality materials such as metal, concrete, natural stone, wood, glass, and acrylics. Techniques shall be incorporated during construction to reduce fading and damage caused by exposure to sunlight or degradation due to other elements.

3. All freestanding signs that incorporate lighting shall have underground utility service.

4. All temporary signs and banners shall be maintained in good condition for as long as the sign is displayed.

E. **Sign Placement**.

1. **Location of Building-Attached Signs**. Building-attached signs may be located along any frontage of a building that faces directly onto a public right-of-way or an internal circulation path of the site. Orientation of signs such that they face directly onto residential property is allowed only when there is no practical alternative and the visibility of the sign from the residence is minimized and not illuminated.

2. **Clearance from Public Utility Facilities**. The person erecting a sign and the owner of the premises shall maintain any legally required clearance from communications and electric facilities. A sign may not be constructed, erected, installed, maintained, or repaired in any manner that conflicts with a rule, regulation, or order of the California Public Utilities Commission pertaining to the construction, operation, and maintenance of public utilities facilities.

3. **Interference with Motorist Field of Vision**.

   a. No sign shall be located in a manner which may obstruct or interfere with the view of a traffic signal or other traffic regulatory signs. No sign shall, as determined by the Director, be so located as to create a hazard to the life or property of any person using the public right-of-way.

   b. Any landscaping shall be trimmed as needed to provide clear visibility of the sign or signs.

   c. Signs shall not be located within the "cross visibility area," as defined in the Design Improvement Standards Manual.

4. **Setback and Spacing of Freestanding Signs**. Setback and spacing standards for freestanding signs are as follows:

   a. The minimum setback distance for any portion of any freestanding sign shall be measured from the back of the public right-of-way or side of a driveway. With the exception of front setbacks, sign setbacks shall be determined by base Zone District. Signs may be allowed within front setbacks, provided that the signs are not located within a public right-of-way, required cross visibility area, utility or private road easement.

   b. The minimum spacing distance between permanent freestanding signs, excluding on-site directory and menu/order board signs, shall be 250 feet, (except that U.S. Highway 50-oriented signs shall be separated by a minimum of 1,000 feet). The designated approving authority as noted in Table 130.36.080.1 (Planning Sign Permits and Review Authority) below in this Chapter may allow a reduction in minimum spacing requirements to ensure that a qualified establishment can have at least 1 freestanding sign as allowed in Tables 130.36.070.1 and 130.36.070.2 (Signage Standards for Permanent On-Site Signs, Community Region and Rural Area, respectively) below in this Section and also for establishments with more than one street frontage (e.g., corner lots). The designated approving authority will review a proposed sign location on a case-by-case basis to ensure the sign is located outside the required cross visibility area and does not otherwise inhibit motorist safety.

F. **Maintenance Requirements**. Every sign and all parts, portions, and materials thereof shall be maintained and kept in proper repair. The display surface of all signs shall be kept clean, neatly painted, and free from rust and corrosion. Any cracked, broken surfaces, malfunctioning lights, missing sign copy, or other non-maintained or damaged portions of a sign shall be repaired or replaced within 30 days following notification by the County. Noncompliance with such a notice will constitute a nuisance and zoning violation and will be enforced as such.

G. **Sign Removal or Replacement**. When a sign is removed or replaced, all brackets, poles, and other structural elements that support the sign shall also be removed. Affected surfaces shall be restored to match the adjacent portion of the structure. This requirement does not apply to routine maintenance.

H. **Design Standards for Specific Sign Types**. In addition to the general sign design requirements in Subsection A, the following requirements shall apply to specific sign types listed below.

1. **A-Frame Signs**. A-frame signs, where allowed under Section 130.36.050 (Temporary Signs) above in this Chapter, shall be placed at least 5 feet behind the face of curb and outside the County right-of-way. Where there is no sidewalk or curb, A-frame signs shall be located outside of the County right-of-way. A-frame signs shall not be placed where they may obstruct vision or create other public safety hazards. A-frame signs shall comply with clearance rules under the Americans with Disabilities Act. A-frame signs shall be removed during all times when the establishment is closed.

2. **Awning and Canopy Signs**. Awning and canopy signs may be allowed only as an integral part of the awning or canopy to which they are attached or applied and shall be considered wall signs for sign area calculation purposes. The following requirements shall apply:

   a. Lettering shall not exceed 25 percent of the total surface area.

   b. Only permanent signs that are an integral part of the awning or architectural projection shall be allowed. Temporary signs shall not be placed on awnings.

   c. Awning signs shall be allowed only on first- and second-story occupancies.

   d. Awnings shall not be lit from under the awning (backlit) so that the awning appears internally illuminated. Lighting directed downward that does not illuminate the awning is allowed.

3. **Electronic (Digital) Signs**. The following standards apply to electronic (digital) signs:

   a. Digital display is limited to 50 percent of the total allowable display face area of any particular sign.

   b. Signs shall not change message more than once every 8 seconds (dwell time).

   c. Digital signs shall not operate at brightness levels of more than 0.3 foot-candles above ambient light, as measured using industry standard procedures at a distance from the sign face as determined by the following formula:

$$\text{Measurement distance} = \sqrt{\text{Area of sign in square feet x 100}}$$

Each digital display area shall have a light-sensing device that will adjust the brightness of the sign as ambient light conditions change throughout the day;

4. **Freestanding Signs**. Freestanding sign materials and design, including monument and pylon signs, shall be complementary to the materials and design of the structures for the related development. For example, if the façade of the structure is made of brick or brick veneer, a complementary freestanding sign would also include brick.

5. **Projecting Signs**. Projecting signs, including, but not limited to, blade signs, bracket signs, under canopy signs, and marquee signs, shall be considered wall signs for the purposes of sign area calculation purposes. Projecting signs shall only be allowed as follows:

   a. **Location**. Projecting signs shall be placed only on ground-floor façades, except for establishments located above the ground level with direct exterior pedestrian access. Within the designated rural areas, projecting signs may also be placed on fences, posts, and railings.

   b. **Angle of Projection**. Projecting signs shall either be located at right angles to the structure front along the façade, or, when located on the corner of a building, at a 45-degree angle to the corner of the structure.

   c. **Height**. Where located above a pedestrian walkway, the lowest point of a blade or bracket sign shall be a minimum of 8 feet above grade.

   d. **Projection**. The sign may project a maximum of 5½ feet from the structure.

   e. **Suspension**. The sign shall be suspended with a clear space of at least 6 inches between the sign and the structure. Exceptions may be granted consistent with applicable building code requirements.

   f. **Sign Structure**. Sign supports and brackets shall be compatible with the design and scale of the sign.

6. **Wall Signs**.

   a. Wall signs shall not project more than 12 inches from the structure's façade.

   b. Wall sign raceways shall be concealed from public view (e.g., within the structure's wall or otherwise integrated with the design of the sign and structure) so as to not detract from the architectural character of the structure.

I. **Standards for Off-Site Subdivision Signs**. The purpose of subdivision signs is to direct the traffic related to new residential subdivisions in a manner that minimizes visual clutter, reduces unnecessary traffic through established neighborhoods, and provides an orderly, attractive, high-quality image of the County.

1. Subdivision signs shall not exceed 40 square feet in sign area, 12 feet in height, and the display area shall be at least 24 inches off the ground.

2. All subdivision signs require approval of a subdivision sign permit as required under Section 130.36.080.D (Subdivision Sign Permit) below in this Chapter and their locations approved within or outside of the County's right-of-way.

3. Subdivision signs listing multiple subdivisions shall include removable sign panels with no more than 1 panel per residential subdivision.

4. No subdivision sign may be located within 1,000 feet of another subdivision sign except in the case of signs on different corners of an intersection, unless an unusual situation causes the need for a deviation as determined by the County.

5. All subdivision signs placed on private property require written consent of the property owner and are subject to approval by the Director. All subdivision signs placed within County right-of-way require an Encroachment Permit issued by the County Department of Transportation.

6. Subdivision signs may only be located in a manner that does not obstruct the view of traffic or safety signs, encroach within the cross visibility area, or otherwise pose a traffic or safety hazard.

7. There shall be no additions, tag signs, streamers, balloons, flags, riders, devices, display boards, or appurtenances added to the subdivision signs as approved.

8. Structures and panels on subdivision signs may not be displayed after a subdivision developer has completed the sale of all units in the development. Each developer shall be responsible for sign removal. The County may require the developer to submit a performance deposit or other form of security to ensure compliance with the standards of this Section.

9. All signs for housing subdivisions shall be removed within 30 days after all lots in the subdivision are sold.

10. The County may require the developer to submit a performance deposit or other form of security to ensure compliance with the standards of this Section.

J. **Standards for U.S. Highway 50-Oriented Signs**. Proposed on-site signs within 100 feet of the edge of the right-of-way of U.S. Highway 50, outside of the officially designated scenic corridor, are subject to a Design Review Permit. U.S. Highway 50-oriented signs shall be consistent with the standards provided below, and as required

in other provisions of this Chapter. U.S. Highway 50-oriented signs shall not be used as general advertising for hire.

1. **Location**.
   a. **Spacing Between Signs**. U.S. Highway 50-oriented signs shall be a minimum of 100 feet from the edge of the highway right-of-way separated by at least 1,000 feet.

   b. **Setbacks.** All signs must be set back a minimum of 10 feet from the highway right-of-way or other distance as determined by Caltrans. All U.S. Highway 50-oriented signs must be distanced from any residential district by a minimum of 200 feet.

   c. **Visibility**. U.S. Highway 50-oriented signs shall not be located to inhibit pedestrian or vehicular visibility and more specifically shall not be located within the clear visibility area as defined in this Chapter or other County adopted policies or standards. Illuminated signs shall be directed away from any residentially designated land.

2. **Quantity**. 1 U.S. Highway 50-oriented sign shall be allowed per either:

   a. Integrated developments, as defined in this Chapter; or

   b. Sites with a single tenant of 10 acres or more.

3. **Area**.

   a. **Maximum Allowed Area**. For single-tenant signs, the maximum sign area shall be 60 square feet. For multi-tenant signs, the maximum sign area shall be 200 square feet.

   b. **Ancillary Components**. Ancillary components of the sign, such as shopping center identification, shall not exceed 25 percent of the total sign area and shall be excluded from the calculation of the sign area.

   c. **Freestanding Sign Are**a. The area of a U.S. Highway 50-oriented sign shall be in addition to the allowable freestanding street frontage sign area if the underlying property is adjacent to the highway and a local street.

4. **Height**. The maximum height of U.S. Highway 50-oriented signs shall be as follows:

   a. **For single-tenant signs**, 1.5 times the height of an adjacent structure up to a maximum of 30 feet. Within designated scenic corridors, the maximum height of a single-tenant sign shall be 24 feet.

   b. **For multi-tenant signs**, a maximum of 50 feet. Within designated scenic corridors, the maximum height of a multi-tenant sign shall be 48 feet.

5. **Architecture.** U.S. Highway 50-oriented signs shall be designed as pylon signs, and shall be composed of materials and design-compatible with the building materials and design of the applicable establishment.

6. **Illumination**. If illuminated, U.S. Highway 50-oriented signs must be internally lit. Signs shall not have blinking, flashing, or intermittent lights or other illuminating devices that have a changing light, brightness, or color. Electronic (digital) changeable copy LED lights are allowed to be incorporated into the structure consistent with restrictions listed in Section 130.36.070.H.3 (Electronic (Digital) Signs) above in this Section.

7. **Special Development and Design Standards for Designated State Scenic Highway Corridors**. *(Reserved for future Scenic Corridor Ordinance.)*

K. **Standards for Permanent On-Site Signs**. Permanent on-site sign standards in this section are listed separately for the designated Community Regions and rural areas of the County based on zone and sign type. See Table 130.36.070.1 (Community Region Area Signage Standards for Permanent On-Site Signs) and Table 130.36.070.2 (Rural Area Signage Standards for Permanent On-Site Signs) below in this Section. Standards for home occupation signs are on Table 130.36.070.3 (Sign Standards for Home Occupation Signs) below in this Section. Standards for U.S. Highway 50-oriented signs are in Section 130.36.070.J (Standards for U.S. Highway 50-Oriented Signs) above in this Section. Where allowed the following sign types shall conform to standards listed below.

1. **Building-Attached Sign Allowance**. Building-attached signs (and projecting signs placed on fences, posts, railings and roofs within the designated rural areas) have a maximum allowable sign area that can be used for 1 or more signs as specified in Tables 130.36.070.1 and 130.36.070.2 (Signage Standards for Permanent On-Site Signs, Community Region and Rural Area, respectively) below in this Section. Building-attached signs are allowed on walls that face public streets, parking areas, and pedestrian walkways. Wall signs are not allowed on walls facing adjoining residential property within designated Community Regions of the County. Within the designated rural areas of the County, wall signs (where allowed), may face adjoining residential properties.

2. **Freestanding Sign Allowance**. Freestanding signs are allowed a maximum number, maximum sign area, and maximum height standard per individual establishment or integrated development as specified in Tables 130.36.070.1 and 130.36.070.2 (Signage Standards for Permanent On-Site Signs, Community Region and Rural Area, respectively) below in this Section. For definitions, see Section 130.36.120 (Definitions) below in this Section.

3. **Changeable Copy Allowance**. Changeable copy signs are only allowed in commercial and agricultural zoning districts and for nonresidential uses in residential zones (e.g., religious institutions and public service uses, home occupations, community centers, and schools).

4. **Menu/Order Board Signs for Drive-In and Drive-Through Uses.** Where allowed, each drive-in or drive-through use is allowed a maximum of 60 square feet of menu/order board signage, with no one sign to exceed 30 square feet. The sign(s) shall not count toward the cumulative allowable display area purposes of Tables 130.36.070.1 and 130.36.070.2 (Signage Standards for Permanent On-Site Signs, Community Region and Rural Area, respectively) below in this Section, either in terms of number or cumulative area. The maximum height for a menu/order board sign shall be 6 feet.

Table 130.36.070.1a - Community Region Area Signage Standards for Permanent On-Site Signs

Zone District	Allowed Signs and Development Standards in Community Regions				
	Building-Attached	Freestanding			
		Number Allowed	Max. Area	Max. Height	Specific Reg.
Residential and Agricultural Zone Districts					
R1 R20K R1A R2A R3A RE (-5 or -10)	Not allowed	1 non-illuminated sign per subdivision or neighborhood	12 sf	8 feet	See Section 130.36.070
R2 RM	Not allowed	1 non-illuminated sign per subdivision or neighborhood	12 sf	8 feet	
RT	Not allowed	1 sign per development	12 sf	8 feet	
MP	Not allowed	1 sign per park	12 sf	8 feet	
PA	Not allowed	1 non-illuminated sign per parcel	16 sf	12 feet	
AG	Not allowed	2 non-illuminated signs per parcel	32 sf	12 feet	

Table 130.36.070.1b - Community Region Area Signage Standards for Permanent On-Site Signs		
Zone District	**Allowed Signs and Development Standards in Community Regions**	
	Building-Attached	**Freestanding**
Commercial Zone Districts		
CC CG CR	1 or more signs per establishment based on floor area as follows: • < 10,000 sf floor area = 50 sf max sign area • 10,001—25,000 sf floor area = 75 sf max sign area • > 25,001 sf floor area = 100 sf max sign area	**Individual Establishment:** No more than 1 sign per public street frontage as follows: ➢ First street frontage: 50 sf max area, 12 ft max height ➢ Other street frontage(s): 30 sf max area, 10 ft max height **Integrated Development:** 1 multi-tenant sign per public street frontage as follows: ➢ First street frontage: 80 sf max area, 20 ft max height ➢ Other street frontage(s): 40 sf max area, 10 ft max height
CL CM CPO	1 or more signs not exceeding a combined total of 50 sf per establishment; Roofline is max height	**Individual Establishment:** No more than 1 sign per public street frontage as follows: ➢ Primary frontage: 50 sf max area, 12 ft max height ➢ Other street frontage(s): 30 sf max area, 8 ft max height **Integrated Development:** 1 multi-tenant sign per public street frontage as follows: ➢ First street frontage: 80 sf max area, 20 ft max height ➢ Other street frontage(s): 40 sf max area, 10 ft height limit

Table 130.36.070.1c - Community Region Area Signage Standards for Permanent On-Site Signs		
Zone District	**Allowed Signs and Development Standards in Community Regions**	
	Building-Attached	**Freestanding**
Industrial Zone Districts		
I (-H or –L)	1 or more signs not exceeding a combined total of 50 sf per establishment; Roofline is max height	**Individual Establishment:** No more than 1 sign per public street frontage as follows: ➢ 50 sf max area, 12 ft max height
		Integrated Development: 1 multi-tenant sign per public street frontage as follows: ➢ 80 sf max area, 20 ft max height
R&D	2 signs per establishment, 80 sf max area; Roofline is max height	No more than 1 sign per public street frontage for individual establishment or integrated development: ➢ 50 sf max area, 12 ft max height

Table 130.36.070.1d - Community Region Area Signage Standards for Permanent On-Site Signs		
Zone District	**Allowed Signs and Development Standards in Community Regions**	
	Building-Attached	**Freestanding**
Miscellaneous Zone Districts		
TPZ	Not allowed	2 non-illuminated signs per parcel: ➢ 32 sf max area each, 12 ft max height
RF (-H or –L)	1 or more signs not exceeding a combined total of 50 sf per structure; Roofline is max height	1 non-illuminated sign per parcel: ➢ 16 sf max area, 12 ft max height
OS, TC	Not allowed	Not allowed

Table 130.36.070.2a – Rural Area Signage Standards for Permanent On-Site Signs					
Zone District	**Allowed Signs and Development Standards in Rural Areas**				
	Building-Attached	**Freestanding**			
		Number Allowed	**Max. Area**	**Max. Height**	**Specific Reg.**
Residential and Agricultural Zone Districts					
R1 R20K R1A R2A R3A RE (-5 or -10)	Not allowed (Except in RE-10 in rural areas)	1 non-illuminated sign per subdivision or neighborhood	12 sf	8 feet	See Section 130.36.070
RM	Not allowed	1 non-illuminated sign per subdivision or neighborhood	12 sf	8 feet	
RL (10-160)	1 or more signs not exceeding a combined total of 50 sf per establishment; Max height is 6 feet above the roofline	1 non-illuminated sign per parcel	12 sf	12 feet	
LA	Not allowed	1 non-illuminated sign per parcel	12 sf	12 feet	
PA	1 or more signs not exceeding a combined total of 50 sf, per establishment; Max height is 6 feet above the roofline	1 non-illuminated sign per parcel	16 sf	12 feet	
AG	1 or more signs not exceeding a combined total of 50 sf, per establishment; Max height is 6 feet above the roofline	2 non-illuminated signs per parcel	32 sf	12 feet	

Table 130.36.070.2b - Rural Area Signage Standards for Permanent On-Site Signs		
Zone District	**Allowed Signs and Development Standards in Rural Areas**	
	Building-Attached	**Freestanding**
Commercial Zone Districts		
CC CG CL CM CRU	1 or more signs per establishment based on floor area as follows: • < 10,000 sf floor area = 50 sf max sign area • 10,001—25,000 sf floor area = 75 sf max sign area • > 25,001 sf floor area = 100 sf max sign area	**Individual Establishment:** No more than 1 sign per public street frontage as follows: ➢ First street frontage: 50 sf max area, 12 ft max height ➢ Other street frontage(s): 30 sf max area, 8 ft max height **Integrated Development:** 1 multi-tenant sign per public street frontage as follows: ➢ First street frontage: 80 sf max area, 20 ft max height ➢ Other street frontage(s): 40 sf max area, 10 ft height limit
CPO	1 or more signs not exceeding a combined total of 50 sf per establishment; Roofline is max height	**Individual Establishment:** No more than 1 sign per public street frontage as follows: ➢ First street frontage: 50 sf max area, 12 ft max height ➢ Other street frontage(s): 30 sf max area, 8 ft max height **Integrated Development:** 1 multi-tenant sign per public street frontage as follows: ➢ First street frontage: 80 sf max area, 20 ft max height ➢ Other street frontage(s): 40 sf max area, 10 ft max height

Table 130.36.070.2c - Rural Area Signage Standards for Permanent On-Site Signs		
Zone District	**Allowed Signs and Development Standards in Rural Areas**	
	Building-Attached	**Freestanding**
Industrial Zone Districts		
I (-H or –L)	1 or more signs not exceeding a combined total of 50 sf per establishment; Roofline is max height	**Individual Establishment:** No more than 1 sign per public street frontage: ➢ 50 sf max area, 12 ft max height
		Integrated Development: 1 multi-tenant sign per public street frontage: ➢ 80 sf max area, 20 ft max height
R&D	2 signs per establishment; 80 sf max area; Roofline is max height	No more than 1 sign per public street frontage for individual establishment or integrated development: ➢ 50 sf max area, 12 ft max height

Table 130.36.070.2d - Rural Area Signage Standards for Permanent On-Site Signs		
Zone District	**Allowed Signs and Development Standards in Rural Areas**	
	Building-Attached	**Freestanding**
Miscellaneous Zone Districts		
FR TPZ	Not allowed	2 non-illuminated signs per parcel: ➢ 32 sf max area each, 12 ft max height
RF (-H or –L)	1 or more signs not exceeding a combined total of 50 sf per establishment; Max height is 6 feet above the roofline	1 non-illuminated sign per parcel: ➢ 16 sf max area, 12 ft max height
OS TC	Not allowed	Not allowed

Table 130.36.070.3 - Sign Standards for Home Occupation Signs								
	Allowed Signs and Development Standards in Rural Areas							
Zone District	Building-Attached Signs				Freestanding Signs			
	Number Allowed	Max. Area	Max. Height	Location	Number Allowed	Max. Area	Max. Height	Location
R1 R20K R1A R2A R3A RM	1 sign per home occupation	2 sf	N/A	Adjacent to front entrance	Not allowed			
RE (-5 or-10) RM Agricul-ture and Resource Zones	1 sign per home occupation	2 sf	N/A	Adjacent to front entrance	2 signs	12 sf each	6 feet	1 adjacent to residence, 1 within front setback

130.36.080 - Permit Requirements and Review Procedures.

This Section describes permit requirements and review procedures applicable to all signage in the unincorporated Community Regions and rural areas of the County. Signs proposed within communities that have County adopted local sign standards or guidelines shall conform to those standards/guidelines. Signs proposed within communities that have a Board appointed community design advisory committee are required to be submitted to the committee for a review of consistency with local sign standards/guidelines.

A. **Sign Permit Required**. Planning Sign Permits shall be required for specified types of permanent signs prior to erection, relocation, alteration, or replacement, as listed in Table 130.36.080.1 (Planning Sign Permits and Review Authority) below in this Section, unless otherwise exempted by this Chapter. Planning Sign Permits shall be processed in accordance with Chapter 130.52 (Permit Requirements, Procedures, Decisions, and Appeals) in Article 5 (Planning Permit Processing) of this Title.

1. No planning approvals shall be required for general maintenance of existing conforming signs or replacement of a conforming sign face (including message) when the area of the sign is not being changed, subject to Section 130.36.020 (General Sign Requirements) above in this Chapter.

2. Sign Permit(s) shall be required as part of the review of any discretionary application that includes proposed signage. The Sign Permit shall be in addition to the discretionary application or permit.

3. Sign Permits are not required for the display of temporary signs. However, temporary signs shall be consistent with the development standards and time duration limits established in this Chapter.

B. **Uniform Sign Program Required**. A Uniform Sign Program shall be required for all new multi-tenant shopping centers, office parks, and other multi-tenant, mixed-use, or otherwise integrated developments of 3 or more separate tenants/uses that share structures, public spaces, landscape, and/or parking facilities. A Uniform Sign Program provides a process for the County's review of, and decisions related to, requests for signs for multi-tenant projects. The Uniform Sign Program allows for the integration of a project's signs with the design of the structures to achieve a unified architectural statement and to approve common sign regulations for multi-tenant projects. The Zoning Administrator is the decision-making authority for Uniform Sign Programs. However, if part of an application is reviewed and decided by the Planning Commission or Board of Supervisors, the Uniform Sign Program shall be decided by same higher-level Review Authority in conjunction with other entitlements. Deviations from the sign standards in Section 130.36.070 (Sign Development and Design Standards) above in this Chapter of up to 20 percent over maximum allowance are allowed through the Uniform Sign Program. Standard procedures for application submittal, review, decision, and appeal are outlined in Chapter 130.52 (Permit Requirements, Procedures, Decisions, and Appeals) in Article 5 (Planning Permit Processing) of this Title.

C. **U.S. Highway 50-Oriented Signs**. A Design Review Permit shall be required for all U.S. Highway 50-oriented signs located within 100 feet of the edge of the highway right-of-way. The approval of a Design Review Permit is a ministerial project pursuant to CEQA when in compliance with adopted standards set forth in Section 130.36.070.J (Standards for U.S. Highway 50-Oriented Signs) above in this Chapter. If part of an application is reviewed and decided by the Planning Commission or Board of Supervisors, the Design Review Permit shall be decided by same higher-level Review Authority in conjunction with other entitlements. Standard procedures for application submittal, review, decision, and appeal are outlined Chapter 130.52 (Permit Requirements, Procedures, Decisions, and Appeals) in Article 5 (Planning Permit Processing) of this Title.

D. **Subdivision Sign Permit.** A Sign Permit shall be required for all subdivision signs to ensure their locations are approved within or outside the County's right-of-way and

that they are consistent with the standards under Section 130.36.070.I (Standards for Off-Site Subdivision Signs) above in this Chapter.

E. **Variances.** Applications for a Variance from the terms of this Chapter shall be reviewed according to the Variance procedures set forth in Chapter 130.52.070 (Variance) in Article 5 (Planning Permit Processing) of this Title.

F. **Review Procedures.**

1. Method of Application. An application for a Sign Permit, Uniform Sign Program, Community Sign Program, U.S. Highway 50-Oriented Sign Permit, or Variance shall be made on the form(s) prescribed by the Planning Division. The application shall be accompanied by any fees as specified by Board resolution.

2. Application Review Procedures, Decisions, and Appeals. The application review procedures, decisions, and appeals of decisions for Sign Permit, Uniform Sign Programs, Community Sign Program, U.S. Highway 50-Oriented Sign Permits, or Variances shall be as provided in Chapter 130.52 (Permit Requirements, Procedures, Decisions, and Appeals) in Article 5 (Planning Permit Processing) of this Title.

Table 130.36.080.1 - Planning Sign Permits and Review Authority					
<u>Planning Permit Required</u>: **A: Administrative Permit** **DR: Design Review Permit** **CUP: Special Use Permit** **V: Variance**	**P: Allowed Use - No Planning Permit Required** [1]	**D: Planning and Building Department Director** **ZA: Zoning Administrator** **PC: Planning Commission** **BOS: Board of Supervisors**			
SIGN TYPE [1]		**REVIEW AUTHORITY**			
		D	**ZA**	**PC**	**BOS**
Replacement[2]	P				
Freestanding or Building—Attached Signs		A			
Temporary On-Site Signs including, but not limited to: New Apartments, Grand Opening Banners, Products/Services, Special Events	P				
Off-Site Signs:[4] New Subdivisions		A			
U.S. Hwy 50-Oriented Signs		DR			
Exempt Signs[3]	P				
Home Occupation Signs	P				
Signs Exceeding Development Standards			V		
Signs on Public Property		A			
Uniform Sign Programs:					
• New or Modified Uniform Sign Program			CUP		
• Construction of new or replacement signs as part of an approved program	P				
Community Sign Programs: (Directional, Identity, Event, Industry Association)					
• New or Modified Community					Required[5]

Table 130.36.080.1 - Planning Sign Permits and Review Authority					
Planning Permit Required: **A: Administrative Permit** **DR: Design Review Permit** **CUP: Special Use Permit** **V: Variance**	**P: Allowed Use - No Planning Permit Required** [1]	**D: Planning and Building Department Director** **ZA: Zoning Administrator** **PC: Planning Commission** **BOS: Board of Supervisors**			
SIGN TYPE [1]		**REVIEW AUTHORITY**			
		D	**ZA**	**PC**	**BOS**
Sign Program					
• Construction of new or replacement signs as part of an approved program	P				
Sign(s) Proposed as Part of a Discretionary Project	Permitted with Discretionary Project				

NOTES:
[1] All allowed signs may be subject to a building permit, as required by current Building Code. All signs requiring a building permit shall be consistent with the requirements of this Chapter.
[2] No planning approvals shall be required for general maintenance of existing conforming signs or replacement of a legal, nonconforming sign face.
[3] Signs exempt from a Planning Sign Permit as specifically listed or described in Section 130.36.030. All signage shall be consistent with the requirements of this Chapter.
[4] All other off-site commercial signage is prohibited, unless expressly allowed in Chapter 130.36.
[5] The Board is the decision-making authority for all new Community Sign Programs (Section 130.36.060). CUP when signs are on private property.

130.36.090 – Prohibited Signs.

A. **General Prohibition**. All off-site commercial signage on private property is prohibited unless as otherwise allowed in this Chapter. Existing off-site signs (e.g., billboards) are considered nonconforming signs as regulated by Section 130.36.100 (Illegal, Abandoned, and Nonconforming Signs) below in this Chapter. Off-site signs on County property are regulated by Section 130.36.110 (Signs on County Property) below in this Chapter.

B. The signs listed in this Section are prohibited in all zones. Except as otherwise specifically noted herein, these prohibitions apply in all unincorporated Community Regions and rural areas of the County.

1. Any sign not specifically allowed by this Chapter.

2. Billboards as defined herein. This does not prohibit relocation agreements as authorized by state law (California Business and Professions Code § 5412).

3. Roof signs or signs placed above the roofline in Community Regions.

4. Animated, flashing, scrolling, digital or video screen signs where the message is displayed for less than 8 seconds (dwell time) before changing to a different message.

5. Pennants, banners, balloons, or other paraphernalia composed of paper, cloth, or other flexible material, except as otherwise allowed.

6. Pole signs except where permitted within designated rural areas of the County, consistent with standards listed in Table 130.36.070.2 (Rural Area Signage Standards for Permanent On-Site Signs) above in this Chapter.

7. Signs placed on the public right-of-way or affixed to an element or structure on the public right-of-way, or located on a publicly owned tree, fence, or utility pole or otherwise posted on public property, except where required by a governmental agency.

8. Inflatable balloon signs, including, but not limited to, individual balloons, balloon strings, and other inflatable objects made of a flexible material and inflated so as to be lighter than air.

9. Signs painted upon a fence, or free standing wall.

10. Mobile billboard advertising displays traversing upon or parked on a public right-of-way for the primary purpose of general advertising for hire.

11. Movable signs with a commercial message.

12. Signs attached to light standards (poles), traffic control devices, or utility poles.

13. Signs affixed to a structure or property not owned by the person or entity installing the signs, unless authorized by the written consent of the owner of the structure or property. For purposes of this provision, "owner" means any person or entity holding the immediate right of possession and control.

14. Signs that are dilapidated, abandoned, or in disrepair or dangerous condition.

15. Window signs that exceed 25 percent of any window.

130.36.100 - Illegal, Abandoned, and Nonconforming Permanent Signs.

A. **Illegal Permanent Signs.** Illegal permanent signs shall be abated by the property owner or person responsible for installing or maintaining the sign.

1. The duty to abate arises upon notice by the Planning Director. Such notice shall give such parties a 30-day opportunity to cure by conformance to current law and/or current permit, to abate by removal or other remedial action.

2. Such notices may be appealed in the same manner as any other sign-related decision. However, when a sign poses a serious and immediate threat to public health or safety by virtue of its physical condition, without consideration of the message thereon, then the threat may be summarily abated by court order, or an emergency abatement may be summarily abated by the County with the reasonable cost of abatement chargeable to the sign owner and/or property owner.

B. **Abandoned Signs**. The following standards shall apply to conforming and nonconforming abandoned signs:

1. If a sign is maintained, the sign copy shall be replaced with blank sign copy within 90 days of the close of the operation (e.g., no utility service, not open for more than 2 weeks).

2. A nonconforming sign that is maintained with blank copy shall only be allowed to remain for 9 consecutive months (for a total of 12 months from closure of the establishment). At the conclusion of this time period, if a new establishment that utilizes the nonconforming sign structure has not been established, the entire sign structure shall be removed. However, within the designated rural areas of the County, the maximum timeline to maintain blank copy on a nonconforming sign shall be 24 months from establishment closure.

3. A conforming sign not in use, but which could be re-used in conjunction with the ownership or operation of a new establishment on a property, shall not fall under the definition of abandoned.

4. Abandoned signs that are not maintained or removed consistent with the requirements of this Section may be abated by the County with the cost of abatement reimbursed by the property owner and may become a lien against the property.

C. **Nonconforming Signs.**

1. **Removal/Abatement**. Any sign which becomes nonconforming as a result of the provisions of this Chapter shall be protected from removal by applicable provisions of state law and may be removed only as allowed by state law. The County shall order nonconforming signs to be abated by the property owner and/or person or entity responsible for sign installation and/or maintenance.

2. **Maintenance and Repair**. Any sign currently in use that was legally installed but does not conform to the requirements of this Chapter may continue with routine maintenance and repair.

3. **Relocation and Alteration**. No nonconforming sign shall be moved, enlarged, or raised in height unless such relocation, alteration, or enlargement is required by law, or brings the sign into conformance with the provisions of this Chapter. Modification of a nonconforming sign may be allowed through the plan check application process so long as it is determined that there is an increase in the level of conformity of the subject nonconforming sign. Existing off-site signs (e.g., billboards) are considered nonconforming signs and shall not be converted to digital signs.

4. **Restoration of Damaged Signs**. As determined by the Director, whenever 50 percent or less of a nonconforming sign is destroyed by fire or other calamity (not including intentional acts), the sign may be restored to its nonconforming condition and the use modified as necessary to comply with current safety code requirements. Any nonconforming sign destroyed by more than 50 percent shall not be restored unless it is brought into compliance with the provisions of this Chapter.

5. **Building Façade Modifications**. If a Building Permit is issued for major modifications to the exterior of a building façade, as determined by the County, any nonconforming building signs on the façade undergoing modification shall be brought into full conformance with the provisions of this Chapter prior to approval for final occupancy.

130.36.110 - Signs on County Property.

This Section states rules and policies for display of signs on properties owned by El Dorado County, either in fee or by holding the present right of possession and control. This Section provides the process and standards for establishing signage on County property. In adopting this Section, the Board acts in its proprietary capacity as to County property, as defined in this Section, within the County. This Section is adopted in compliance with the County's general powers, property rights, Government Code §§ 65850(b), 38774, and 38775, Business and Professions Code § 5200 et seq., and Penal Code § 556 et seq.

A. **Public Forum**. The County declares that County property shall not function as a designated public forum, unless some specific portion of County property is designated herein, or by Resolution of the Board, as a public forum of one particular type. In such case, the declaration as to public forum type shall apply strictly and only to the specified area and for the specified time period. For the purposes of this chapter, a public forum is a government-owned property that is open to public expression and assembly that is protected under the First Amendment.

B. **General Prohibition.** Unless specifically authorized by this Chapter, no private party signs may be displayed on County property. Any sign posted on County property in violation of this Section may be summarily removed by the County as a trespass and a public nuisance.

C. **Certain Governmental Signs.** The following signs may be erected and displayed on County property:

1. Traffic control and traffic directional signs erected by the County or another governmental unit.

2. Official notices required or authorized by law.

3. Signs placed by the County in furtherance of its governmental functions, including the dissemination of its own speech and information to the public.

4. Signs allowable under Subsections E and F below in this Section.

5. Off-site digital general advertising for hire signs; such signs are only allowed by written agreement with the County.

D. **Temporary Signs Displaying Noncommercial Message.** In areas qualifying as traditional public forums, private persons may display noncommercial message signs thereon, provided that such signs conform to all of the following:

1. The signs must be personally held by a person or personally attended by one or more persons. "Personally attended" means that a person is physically present within 5 feet of the sign at all times.

2. The maximum aggregate size of all signs held or personally attended by a single person is 6 square feet. For purposes of this rule, apparel and other aspects of personal appearance do not count toward the maximum aggregate sign area.

3. The maximum size of any one sign which is held or personally attended by 2 or more persons acting in concert is 50 square feet.

4. The sign must have no more than 2 display faces and may not be inflatable, inflated or air-activated.

5. In order to serve the County's interests in traffic flow and safety, persons displaying signs under this Section may not stand in any vehicular traffic or bicycle lane, and persons displaying signs on public sidewalks must give at least 5 feet width clearance for pedestrians to pass by. Persons holding signs may not obstruct the "cross visibility area," as defined in the Design Improvement Standards Manual.

6. The message substitution policy as described in Section 130.36.020 (General Sign Requirements) above in this Chapter, applies only to traditional public forum areas.

E. **Off-Site Signage in Designated Rural Areas.** Within designated rural areas of the County, off-site commercial signs are allowed with limitations listed or approved by the Board as outlined below.

1. Board approved Industry Association Sign Programs, as listed in Section 130.36.060 (Community Sign Programs) above in this Chapter.

a. Signs located on County property along the street shall be located so as not to obscure vision or create other public safety hazards as determined by the Director of the Department of Transportation ; and

b. Signs located on County property may require an encroachment permit as determined by the Director of the Transportation Department.

F. **Relocation of Off-Site Billboards.** Notwithstanding the prohibition on billboards in Subsection 130.36.090.B.2 (Prohibited Signs) above in this Chapter, pursuant to state law, the Board may approve agreements for relocation of existing off-site general advertising for hire (e.g., billboards) to County owned land.

130.36.120 - Definitions.
As used in this Chapter, the terms below are defined as follows:

Abandoned Sign. Any display or sign remaining in place or not maintained which no longer identifies an ongoing business, product, or service available on the premises where the display or sign is located or where the structure or establishment to which the display or sign is related has ceased operation, or have not been updated upon occupancy of a new establishment.

Figure 130.36.120.A A-Frame Sign

A-Frame Sign. A portable sign capable of standing without support or attachment and sometimes referred to as a "sandwich board." Such signs typically resemble the letter "A", but may also resemble the letters "T" (upright or inverted) or "U" or "H" and are hinged or designed to fold up for easy moving by hand. See Figure 130.36.120.A (A-Frame Sign) in this Section.

Animated Sign. Any sign that uses movement or change of lighting to depict action or movement of visual elements.

Air-Activated Sign. An attention attracting device that is activated by wind or forced air, portions of which flutter or flap in the air; examples are known by commercial names such as sky puppet, air puppets, air crows, air dancers and wind dancers; the definition includes functionally similar devices.

Banner. Any sign made of cloth, lightweight fabric, bunting, plastic, vinyl, paper or similar material that is permanently or temporarily placed on, or affixed to, real property in a location where the message or image displayed is visible to the public from outside of the building or structure. A flag, as defined, shall not be considered a banner.

Billboard. A sign which meets any one or more of the following criteria:

1. A sign structure which is used for the display of off-site commercial messages;

2. A sign structure which constitutes a principal, separate, or secondary use, as opposed to an accessory use, of the parcel on which it is located;

3. An outdoor sign used as general advertising for hire, e.g., on which display space is made available to parties other than the owner or operator of the sign or occupant of the parcel (not including those who rent space from the sign owner, when such space is on the same parcel or is the same development as the sign), in exchange for a rent, fee, or other consideration; or

4. An off-site outdoor advertising sign on which space is leased or rented.

Blade/Bracket Sign. A small, pedestrian-oriented sign that projects perpendicular from a structure (including fences, posts, and railings).

Building-Attached Sign. A sign placed on a wall or canopy, projecting from a wall, or hung underneath a canopy or overhang structure, or placed in a window. This sign category includes wall signs, canopy signs, projecting signs, under canopy signs, and window signs as defined herein. See Figure 130.36.120.B (Building-Attached Signs) below in this Section.

Figure 130.36.120.B Building-Attached Signs

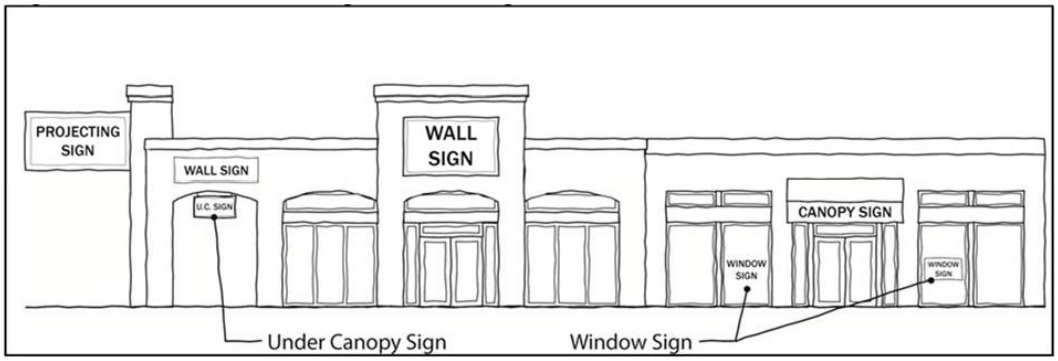

Figure 130.36.120.C Can Sign

Can Sign. A type of sign which contains all the text and/or logo symbols within a single enclosed cabinet that is mounted to a wall or other surface. Such sign structures typically use slide in panels to display the message to the public. See Figure 130.36.120.C (Can Sign) in this Section.

Canopy Sign. Any sign that is a part of or attached to an awning, canopy, or other fabric, plastic, or structural protective cover (excluding a marquee) over an actual or faux door, entrance, window, or outdoor service area. See Figure 130.36.120.B (Building-Attached Signs) above in this Section.

Figure 130.36.120.D Changeable Copy Sign

Changeable Copy Sign. A sign or portion thereof with characters, letters, or illustrations that can be changed or rearranged manually without altering the face or surface of the sign. See Figure 130.36.120.D (Changeable Copy Sign) in this Section.

Figure 130.36.120.E Channel Letter Sign

Channel Letter Sign. A type of sign comprising individual letters that are independently mounted to a wall or other surface with a covered face. The "air space" between the letters is the building façade. A logo may also be considered a channel letter provided it is clearly distinguishable from other sign elements. See Figure 130.36.120.E (Channel Letter Sign) in this Section.

Commercial Directional Sign. A sign whose primary function is to provide directional information for an establishment offering retail sales to the general public, when the establishment does not have access through frontage on a county road.

Commercial Message. Any sign, wording, logo, or other representation that names or advertises an establishment, product, service, or other commercial activity, primarily concerns the economic interest of the message sponsor or audience, or which proposes a commercial transaction.

Community Sign. A sign located on private property or County-maintained roads or rights-of-way (per Section 130.36.110 (Signs on County Property) above in this Chapter) that is part of a County-authorized and coordinated program to provide the public with information and guidance concerning public accommodations, facilities, commercial services, events, and points of scenic, cultural, historic, educational, recreational, religious interest, and other local community destinations as designated and recognized by a Community Sign Program.

Construction Site Sign. A temporary sign mounted or displayed on the site of a construction project during the time when actual physical construction is ongoing.

Copy. The words, letters, numbers, figures, designs, or other symbolic representations incorporated into the visually communicative elements of a sign.

Digital Display. Display methods utilizing Light Emitting Diode (LED), Liquid Crystal Display (LCD), Plasma, projected images, or any functionally equivalent technology, and which is capable of automated remote or computer control to change the image, either in a "slide show" manner (series of still images), or full motion animation, or flashing, blinking or intermittent light, or any combination of them. Also known as dynamic signs, Electronic Message Center (EMC) and Commercial Electronic Variable Message Signs (CEVMS).

Digital Sign. See "Electronic (Digital) Message Sign".

Directional Sign. Any sign (building-attached or freestanding) intended to be permanently affixed and utilized only for the purpose of indicating the direction of any object, place, or area.

Directory Sign. A pedestrian-oriented sign that identifies or lists the names and locations of tenants at a multi-tenant site.

Display Face. See "Sign Face".

Dwell Time. The number of seconds an electronic (digital) message is displayed before changing to a different message.

Figure 130.36.120.F Electronic (Digital) Message Sign

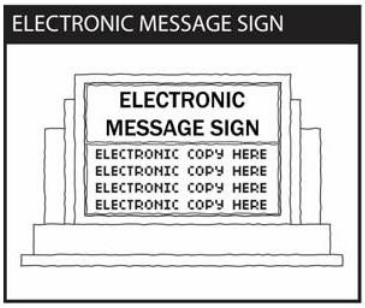

Electronic (Digital) Message Sign. An electronic sign, typically comprising a liquid crystal diode (LCD), light-emitting diode (LED), plasma, or other digital illuminated display that contains one or more messages. An electronic message sign is different from an illuminated sign in that the illumination of the display creates the message, rather than an internal or external light source illuminating the message. Also known as Electronic Message Center (EMC). See Figure 130.36.120.F (Electronic (Digital) Message Sign).

Establishment. Any legal use of land, other than long-term residential, which involves the use of structures subject to the Building Code. By way of example and not limitation, this

definition includes businesses, factories, farms, schools, hospitals, hotels, and motels, offices and libraries, but does not include single-family homes, mobile homes, residential apartments, or residential condominiums. Multi-units housing developments are considered establishments during the time of construction; individual units are not within the meaning of establishment once a certificate of occupancy has been issued or full-time residency begins.

Exempt Sign. A sign that is not subject to a plan check approval or a sign that is not subject to a sign permit.

Flag. Any fabric, banner, or bunting containing distinctive colors, patterns, or design that displays the symbol(s) of a nation, state, local government, company, organization, belief system, idea, or other meaning.

Feather Banner. A pole (typically flexible) with an attachment generally made of fabric and in the shape of a feather or quill, used to attract attention and/or present some visually communicative image to public view. Also known as feather flag, quill flag and similar names.

Freestanding Sign. A permanent sign that is self-supporting in a fixed location and not attached to a building. A freestanding sign can be connected or attached to a sign structure, fence, or wall that is not an integral part of a building. Freestanding signs include, but are not limited to, monument/pylon signs and pole signs as described in this section.

General Advertising for Hire. The enterprise of advertising or promoting other businesses, establishments or causes using methods of advertising, in contrast to self-promotion or on-site advertising. The term applies regardless of whether a given message is commercial, noncommercial, or "public service" in nature. Also known as general advertising.

Highway-Oriented (U.S. Highway 50 only) Sign. An on-site freestanding sign structure (single or multi-tenant identification) located on property within 100 feet of the edge of the right-of-way of U.S. Highway 50 that are outside of the officially designated scenic corridor for which a U.S. Highway 50-Oriented Sign Permit is issued.

Home Occupation Sign. A sign located at a residence advertising a business or profession legally conducted in the residence.

Illegal Sign. A sign which is not lawfully permitted in accordance with current adopted regulations.

Illuminated Sign. A sign with an artificial light source incorporated internally or externally for the purpose of illuminating the sign; includes signs made from neon or other gas tube(s) that are bent to form letters, symbols, or other shapes. An illuminated sign excludes electronic (digital) message signs, which are separately defined.

Inflatable Balloon Sign. A sign consisting of balloons and inflatables made of latex, metallic and/or cloth material, regardless of the size that is used, for the purpose of attracting attention.

Integrated Development. A property or combination of properties containing 3 or more separate tenants and which share common parking, driveway, and access areas.

Legal Nonconforming Sign. A sign that was lawfully erected but that does not comply with the provisions of this Chapter.

Marquee. Any permanent roofed structure projecting over public property or right-of-way attached to and supported by a building.

Menu/Order Board Sign. A sign installed in a drive-through facility and oriented so as to be visible primarily by drive-through customers.

Mobile Billboard. A vehicle which parks upon public land or traverses upon public roads for the primary purpose of displaying general advertising for hire.

Figure

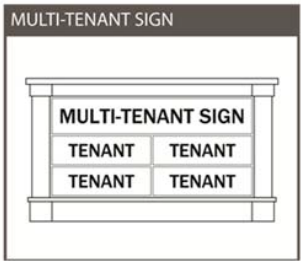

130.36.120.G
Monument Sign

Monument Sign. A freestanding sign detached from a building and having a support structure with a base that appears to be solid and is constructed of permanent material, such as concrete block or brick. This sign type also includes multi-tenant signs. See Figure 130.36.120.G (Monument Sign) in this Section.

Motor Vehicle Fuel Pricing Signs. Signs identifying the brand, type, octane rating, etc., of motor vehicle fuel for sale, as required by state law.

Movable Sign. A sign that can easily be moved from one place to another, typically by mounting it on a vehicle or trailer, or by attaching wheels to it.

Mural. A painted or otherwise attached or adhered image or representation on the exterior of a structure that is visible from a public right-of-way or neighboring property, does not contain commercial advertisement (is noncommercial in nature), and is designed in a manner so as to serve as public art, to enhance public space, and to provide inspiration.

Noncommercial Message. A message that addresses topics of public debate and concern. By way of example and not limitation, such messages often express opinions and views on subjects such as religion, politics, commentary on the arts or sports, or protests.

Off-Site Sign. Any sign not located on the premises of the establishment indicated or advertised by such sign. This definition shall include, but not be limited to billboards, poster panels, painted bulletins, and other similar advertising displays.

On-Site Sign. A sign directing attention to an establishment, commodity, service, or entertainment conducted, sold, or offered upon the same property as that upon which the sign is maintained.

Painted Sign. A sign that comprises only paint applied on a structure.

Pennant. Any lightweight plastic, fabric, or other material, whether or not containing a message of any kind, attached to a rope, wire, or string, usually in a series, designed to move in the wind and attract attention.

Permanent Sign. A sign that is entirely constructed out of durable materials, is fixed in place, and is intended to exist for more than 120 days.

Figure 130.36.120.H Pole Sign

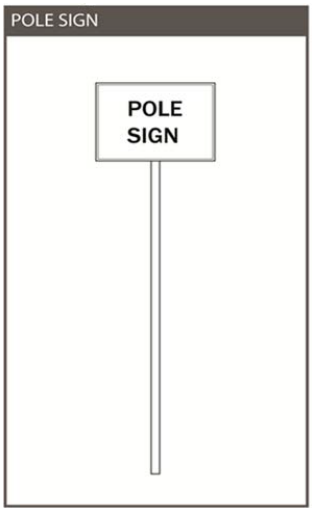

Pole Sign. A freestanding sign detached from a building and supported by one or more structural elements that are either: (a) architecturally dissimilar to the design of the sign; or (b) less than one-quarter the width of the sign face. See Figure 130.36.120.H (Pole Sign) in this Section. (Freestanding signs constructed with poles as the substructure where the poles are encased to incorporate design features are not considered pole signs.)

Portable Sign. Any sign not permanently attached to the ground or other permanent structure, or a sign designed to be transported. Portable signs include, but are not limited to, signs designed to be transported by means of wheels, A-frame signs, menu and sandwich board signs, and umbrellas used for advertising. Clothing or other aspects of personal appearance are not within this definition.

Projecting Sign. A sign attached to and extending outward from the face of a structure. Includes, but is not limited to, a blade/bracket sign, or marquee sign. See Figure 130.36.120.B (Building-Attached Signs) above in this Section.

Figure 130.36.120.I Pushpin Sign

Pushpin Letter Sign. A type of sign comprising individual letters that are independently mounted to a wall or other surface. Such sign may be illuminated by an external light source, such as pendant lighting. The "air space" between the letters is the building facade. See Figure 130.36.120.I (Pushpin Sign) in this Section.

Figure 130.36.120.J Pylon Sign

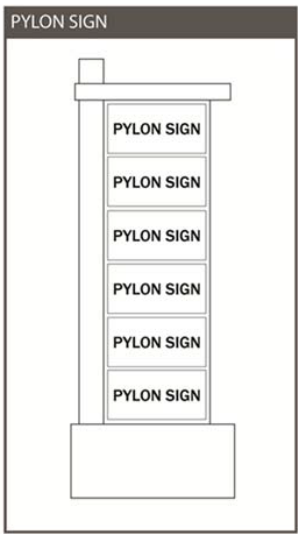

Pylon Sign. A freestanding sign detached from a building and having a support structure with a base that appears to be solid and is constructed of permanent material, such as concrete block or brick. See Figure 130.36.120.J (Pylon Sign) in this Section.

Raceway (Sign). A sign channel for protecting and holding electrical wires and cables, especially a metal rectangular tube used for such purposes.

Real Estate Sign. A temporary sign advertising the sale or lease or other economic transaction involving real property. All signs described in Civil Code § 713 are within this definition.

Roof Sign. A sign erected, constructed, painted, or placed upon or over a roof or parapet wall of a building and which is wholly or partly supported by the building or roof structure.

Sign Face. That area or portion of a sign on which copy is intended to be placed.

Sign. Any device, structure, fixture, or placard displaying graphics, symbols, and/or written copy for the primary purpose of communicating with the public. The following do not fall within the definition of a "sign" for purposes of this Chapter:

a. Architectural or decorative features of buildings (not including lettering, trademarks, or moving parts).

b. Fireworks, candles, and artificial lighting. The legal use of fireworks, candles, and artificial lighting not otherwise regulated by this Chapter.

c. Graphic images that are visible only from above, such as those visible only from airplanes or helicopters, but only if not visible from the street surface or public right-of-way.

d. Gravestones and grave markers.

e. Holiday and cultural observance decorations that are on display for not more than 45 calendar days per year (per parcel or use) and which do not include commercial advertising messages.

f. Interior signs or other visual communicative devices that are located entirely within a building or other enclosed structure and are not visible from the exterior thereof, or located at least 3 feet from the window on the interior of the structure.

g. Manufacturers' marks on tangible products that identify the maker, seller, provider, or product and which customarily remain attached to the product even after sale.

h. Mass transit graphic images mounted on trains or duly licensed mass transit vehicles that legally pass through the County.

i. Murals, painted or otherwise attached or adhered image or representation on the exterior of a structure that is visible from a public right-of-way or neighboring property, does not contain commercial advertisement (is noncommercial in nature), and is designed in a manner so as to serve as public art, to enhance public space, and to provide inspiration.

j. News racks and newsstands.

k. Personal appearance items or devices of personal apparel, decoration, or appearance, including, but not limited to, tattoos, makeup, wigs, costumes, and masks.

l. Shopping carts, golf carts, and horse-drawn carriages.

m. Symbols embedded in architecture such as symbols of noncommercial organizations or concepts including, but not limited to, religious or political symbols, when such are permanently integrated into the structure of a building; the definition also includes foundation stones and cornerstones.

n. Vehicle and vessel insignia as shown on street-legal vehicles and properly licensed watercraft including, but not limited to, license plates, license plate frames, registration insignia, noncommercial messages, messages relating to the business of which the vehicle or vessel is an instrument or tool (not including general advertising for hire), and messages relating to the proposed sale, lease, or exchange of the vehicle or vessel.

o. Vending machines that do not display off-site commercial messages or general advertising messages.

Sign Twirler. A human being, or a robotic imitation of a human being, displaying signs visible from the public right-of-way by holding the physical sign and twirling or spinning for the purpose of attracting public attention. Also known as sign spinner.

Subdivision Sign. A temporary or otherwise limited-term sign for the purpose of providing direction for vehicular and/or pedestrian traffic to the new home sale of multiple lots or dwelling units with a single builder within a master planned community, including both single-family and multi-family for-sale products. All other home sales signs are included within the definition of real estate sign.

Temporary Promotional Sign. Any sign displaying a commercial/promotional message, pennant, streamer, banner, beacon, bunting material, or other similar nonpermanent sign made of paper, cloth, canvas, lightweight fabric, or other non-rigid material, with or without frames, whether displayed as freestanding, wall-mounted, pole-mounted, window-mounted, or painted, or any other method of attachment, or beacon, which is intended to be displayed for a limited period of time.

Temporary Sign. A sign used for the public display of visual messages or images, which is easily installed with or without common hand tools, and which is not intended or suitable for long-term or permanent display (e.g., less than 120 days), due to lightweight or flimsy construction materials. Examples include, but are not limited to, A-frame signs, banners, pennants, streamers, or similar nonpermanent signs made of paper, cloth, canvas, lightweight fabric, or other non-rigid material, with or without frames. Any device that meets the definition of a "structure" in the building code is not within this definition.

Tourist Industry. Commercial businesses that provide goods and/or services (such as attractions and recreation; accommodations; restaurants and retail; transportation, travel and rental car services) for people traveling for pleasure (e.g., vacation, recreation, sightseeing). Upon adoption of the updated Zoning Ordinance, Tourist Industry will be added to the Zoning Ordinance Glossary.

Under Canopy Sign. A pedestrian-oriented sign hung from underneath an awning, canopy or overhang structure/breezeway. See Figure 130.36.120.B (Building-Attached Signs) above in this Section.

Vehicle Sign. A sign mounted upon a vehicle which may legally be parked on or move on public roads as well as a sign mounted upon a water vessel which may legally move upon the waters.

Wall Sign. A sign attached to or erected against the wall of a building or structure with the exposed face of the sign parallel to the plane of such wall. See Figure 130.36.120.B (Building-Attached Signs) above in this Section.

Window Sign. Any permanent or temporary sign, picture, letter, character, or combination thereof, designed to communicate information about an activity, business, commodity, event,

sale, or service that is placed upon and/or inside and/or within 3 feet of a window for the purpose of being visible from the exterior of the window. See Figure 130.36.120.B (Building-Attached Signs) above in this Section.

THIS PAGE INTENTIONALLY LEFT BLANK

CHAPTER 130.37 – NOISE STANDARDS

Sections:

130.37.010 Content
130.37.020 Exemptions
130.37.030 Applicability
130.37.040 Definitions
130.37.050 Acoustic Analysis Requirements
130.37.060 Noise Standards
130.37.070 Noise Reduction Measures
130.37.080 Noise Level Measurements

130.37.010 Content

This Chapter complies with General Plan Goal 6.5 (Acceptable Noise Levels), and supplements County Code Chapter 9.16 (Noise) by establishing standards concerning acceptable noise levels for both noise-sensitive land uses and for noise-generating land uses.

130.37.020 Exemptions

The following noise sources shall be exempt from the standards of this Chapter:

A. Activities conducted in public parks, public playgrounds, and public or private school grounds, including but not limited to school athletic and school entertainment events, providing an amplified sound system is not required or used.

B. The use of any mechanical device, apparatus, or equipment related to or connected with emergency activities or emergency work to protect life or property.

C. Safety signals, warning devices, and emergency pressure relief valves properly operated and in good working order.

D. Noise sources associated with property maintenance, such as lawn mowers, trimmers, snow blowers, power tools in good working order, and cutting of firewood for non-commercial personal use, provided that the activities take place between the hours of eight a.m. and nine p.m. on weekdays and nine a.m. to nine p.m. on weekends and federal holidays.

E. Noise sources associated with agricultural uses listed in Section 130.21.020 (Agricultural Zones: Matrix of Allowed Uses) in Article 2 (Zones, Allowed Uses, and Zoning Standards) of this Title that are performed consistent with the standards and practices of the agricultural industry.

F. Noise sources associated with work performed by public or private utilities in the maintenance or modification of its facilities.

G. Noise sources associated with public holidays, or other commonly celebrated occasions.

H. Traffic on public roadways, railroad line operations, aircraft in flight, and any other activity where regulation thereof has been preempted by state or federal law.

I. Construction (e.g., construction, alteration or repair activities) during daylight hours provided that all construction equipment shall be fitted with factory installed muffling devices and maintained in good working order.

130.37.030 Applicability

Subject to the exemptions in Section 130.37.020 (Noise Standards, Exemptions) above in this Chapter, noise standards established in this Chapter shall apply to all noise generating uses requiring discretionary review or ministerial permits, with the exception of existing and new single-unit residential dwellings on legal lots that are not within areas governed by an Airport Comprehensive Land Use Plan. (General Plan Policy 6.5.1.4, Acceptable Noise Levels, Protection of Noise-Sensitive Development).

130.37.040 Definitions

The following definitions shall apply to this Chapter:

"Acoustic Specialist" means a person trained in acoustic sampling that is qualified to measure sound levels consistent with criteria contained within this article.

"Ambient Sound Level" means the composite of normal or existing sound from all sources, measured at a given location for a specified time of the day or night.

"A-weighting" means the scale for measuring sound that de-emphasizes low and high frequencies in order to simulate human hearing; indicated as dBA.

"Community Noise Equivalent Level (CNEL)" means a weighted average hourly noise level over a 24 hour day used specifically for airport and aircraft noise assessment.

"Day-Night Average Sound Level (Ldn)" means the dBA for a given area during a 24-hour day with a 10dB weighting applied to nighttime sound levels.

"Decibel" means a unit of relative loudness on a logarithmic scale that runs from zero for the least perceptible sound to 140 for sound that causes pain.

"Equivalent Noise Level (Leq)" means the average energy noise level determined by averaging the cumulative noise event levels during a specific period of time and expressing it in A-weighted decibels, or dBA.

"Fixed Sound Source" means a device or machine which creates sounds while fixed or stationary, including but not limited to residential, agricultural, industrial, and commercial machinery and equipment, pumps, fans, compressors, air conditioners and refrigeration equipment, and motor vehicles operated on private property.

"Maximum Sound Level (Lmax)" means the maximum instantaneous noise level measured on a sound level meter.

"Non-Transportation Noise Source" means industrial operations, commercial land uses, outdoor recreation activities and facilities, Heating, Ventilation and Air Conditioning (HVAC) units, schools, hospitals, and other outdoor land use.

"Sensitive Receptor" means a land use in which there is a reasonable degree of sensitivity to noise. Such uses include single- and multi-unit residential dwellings including frequently inhabited outbuildings, schools, hospitals, churches, rest homes, cemeteries, public libraries, and other sensitive uses as determined by the Director.

"Sound Level Meter" means an instrument meeting American National Standard Institute (ANSI) Standard S1.4A-1985 for Type 1 or Type 2 sound level meters, or an instrument and associated recording and analyzing equipment that will provide equivalent data.

"Transportation Noise Source" means traffic on public or private (non-county maintained) roadways, railroad line operations, and aircraft in flight.

130.37.050 Acoustic Analysis Requirements

An acoustic analysis prepared by an acoustic specialist shall be required prior to discretionary authorization or permit approval for the following uses:

A. New noise-generating land uses likely to exceed the performance thresholds in the Tables in Section 130.37.060 (Noise Standards) below in this Chapter when proposed in areas adjacent to sensitive receptors. Noise sources may include industrial operations, outdoor recreation facilities, outdoor concerts and events utilizing amplified sound systems, commercial land uses, fixed sound sources, and other similar uses; or

B. New noise-sensitive land uses proposed in areas exposed to existing or projected exterior noise levels likely to exceed the thresholds in the Tables in Section 130.37.060 (Noise Standards) below in this Chapter.

130.37.060 Noise Standards

The following standards shall apply to all development projects for which an acoustic analysis is required:

A. Noise sensitive land uses affected by non-transportation noise sources shall not exceed standards set forth in Table 130.37.060.1 (Noise Level Performance Standards for Noise Sensitive Land Uses Affected by Non-Transportation Sources) below in this Section:

Table 130.37.060.1 – Noise Level Performance Standards for Noise Sensitive Land Uses Affected by Non-Transportation Sources

NOISE LEVEL PERFORMANCE STANDARDS FOR NOISE SENSITIVE LAND USES AFFECTED BY NON-TRANSPORTATION SOURCES						
	Daytime 7 a.m. - 7 p.m.		**Evening 7 p.m. - 10 p.m.**		**Night 10 p.m. - 7 a.m.**	
Noise Level Descriptor	Community / Rural Centers	Rural Regions	Community / Rural Centers	Rural Regions	Community / Rural Centers	Rural Regions
Hourly L_{eq}, dBA	55	50	50	45	45	40
Maximum level, dBA	70	60	60	55	55	50

1. Each of the noise levels specified above shall be lowered by 5 dBA for simple tone noises, noises consisting primarily of unamplified speech or music, or for recurring impulsive noises. These noise level standards do not apply to residential units established in conjunction with industrial or commercial uses, such as caretaker dwellings.

2. The Director can impose noise level standards which are up to 5 dBA less than those specified above, based upon a determination of existing low ambient noise levels in the vicinity of the project site.

3. The exterior noise level standard shall be applied as follows:

   a. In Community Regions, at the property line of the receiving property;

   b. In Rural Centers and Regions, at a point 100 feet away from a sensitive receptor or, if the sensitive receptor is within the Platted Lands Overlay (-PL) where the underlying land use designation is consistent with Community Region densities, at the property line of the receiving property or 100 feet away from the sensitive receptor, whichever is less; or

c. In all areas, at the boundary of a recorded noise easement between affected properties.

B. Transportation noise shall not exceed thresholds set forth in Table 130.37.060.2 (Noise Level Standards for Noise-Sensitive Land Uses Affected by Transportation Noise Sources) below in this Section:

Table 130.37.060.2 – Noise Level Standards for Noise-Sensitive Land Uses Affected by Transportation Noise Sources

NOISE LEVEL STANDARDS FOR NOISE-SENSITIVE LAND USES AFFECTED BY TRANSPORTATION NOISE SOURCES			
	Outdoor Activity Areas	**Interior Spaces**	
Sensitive Receptor	Ldn/CNEL, dB	Ldn/CNEL, dB	Leq, dB[1]
Residential	60	45	–
Transient Lodging	60	45	–
Hospitals, Nursing Homes	60	45	–
Theaters, Auditoriums, Music Halls	–	–	35
Churches, Meeting Halls, Schools	60	–	40
Office Buildings	–	–	45
Libraries, Museums	–	–	45
Playgrounds, Neighborhood Parks	70	–	–
Notes [1] As determined for a typical worst-case hour during periods of use.			

1. **In Community Regions and Rural Centers:**

   (a) Where the location of outdoor activity areas is not clearly defined, the exterior noise level standard shall be applied at the property line of the sensitive receptor.

   (b) For residential uses with front yards facing the identified noise source, an exterior noise level threshold of 65 dBA Ldn shall be applied at the dwelling facade in addition to the required threshold at the outdoor activity area.

2. **In Rural Regions:** An exterior noise level threshold of 60 dBA Ldn shall be applied at a 100 foot radius from the dwelling on lots five acres and larger. Those lots less than five acres shall have the noise level standards applied at the property line.

3. Where it is not possible to reduce noise levels in those outdoor activity areas limited to 60 dBA Ldn/CNEL thresholds using a practical application of the best-available noise reduction measures, an exterior noise threshold of up to 65 dBA Ldn/CNEL may be allowed provided that available exterior noise

level reduction measures have been implemented and interior noise levels are in compliance with this table.

C. Construction-related noise shall allow for exceptions to the evening and night time standards or other temporary exceedances of noise standards as may be approved by the Director, where necessary to alleviate traffic congestion and safety hazards, or where authorized by an approved permit.

130.37.070 Noise Reduction Measures

Noise reduction measures shall be incorporated into the project design to reduce noise levels at or below the thresholds set forth in Tables in Section 130.37.060 (Noise Standards) above in this Chapter. Where applicable, the following specific requirements shall also apply:

A. To meet noise threshold standards under Table 130.37.060.2 (Noise Level Standards for Noise-Sensitive Land Uses Affected by Transportation Noise Sources) above in this Chapter, where feasible, setbacks shall be the preferred method of noise abatement for residential projects located along U.S. Highway 50. Noise walls shall be discouraged within the foreground viewshed of U.S. Highway 50 and shall be discouraged in favor of less intrusive noise mitigation (e.g., landscaped berms, setbacks) along other high volume roadways.

B. For outdoor concerts and events utilizing amplified sound system(s), a discretionary permit shall be required in the form of a Temporary or Conditional Use Permit. Self-monitoring shall be performed to insure that sound system levels are in compliance with those specified in the conditions of approval based on the acoustic analysis. As a standard condition of approval for such use permits, failure to comply with sound system levels shall result in termination of the event for the duration of the period approved under the use permit and a moratorium on future events for the applicant or the property owner of two calendar years from the date of non-compliance. A second violation after such time shall result in revocation of the Conditional Use Permit, if applicable, and a permanent moratorium on future events for the applicant and property owner whether on that site or any other within the County.

130.37.080 Noise Level Measurements

For the purpose of evaluating conformance with the standards of this Chapter, noise levels shall be measured as follows:

A. **Use of Meter.** Any noise measurement shall be made with a sound level meter using the A-weighted scale. Calibration of the measurement equipment utilizing an acoustical calibrator shall be performed immediately prior to recording any noise data.

B. **Ambient Sound Levels.** Compliance with the above standards shall be determined by measuring the existing noise level with a sound level meter using slow response, with the sound source at issue remaining silent. The ambient sound level shall be

determined based on the mean average of not less than three 20 minute measurements for any given time period. Additional noise measurements may be necessary to ensure that the ambient sound level is adequately determined.

C. **Measuring Exterior Noise Levels.** Except as otherwise provided in this Chapter, exterior noise levels shall be measured at the property line of the affected noise-sensitive land use. Where practical, the microphone shall be positioned five feet above the ground and away from reflective surfaces.

D. **Measuring Interior Noise Levels.** Interior noise levels shall be measured within the sensitive receptor, as defined in Section 130.37.040 (Noise Standards, Definitions) above in this Chapter, at points at least four feet from the wall, ceiling, or floor nearest the noise source, with windows in the normal seasonal configuration. The reported interior noise level shall be determined by taking the arithmetic average of the readings taken at the various microphone locations.

CHAPTER 130.38 – *RESERVED*

THIS PAGE INTENTIONALLY LEFT BLANK

CHAPTER 130.39 – OAK RESOURCES CONSERVATION

Sections:

130.39.010 Content
130.39.020 Applicability
130.39.030 Definitions
130.39.040 Prohibition
130.39.050 Exemptions and Mitigation Reductions
130.39.060 Oak Tree and Oak Woodland Removal Permits – Ministerial Development Projects
130.39.070 Oak Tree and Oak Woodland Removal Permits – Discretionary Development Projects
130.39.080 In-Lieu Fee Appeals
130.39.090 Enforcement
130.39.100 Mitigation Maintenance, Monitoring and Reporting

130.39.010 Content

This Chapter establishes standards for implementing the County's Oak Resources Management Plan (ORMP) in compliance with General Plan Policy 7.4.4.4 and Implementation Measure CO-P (mitigation requirements for impacts to oak resources). This Chapter shall be referred to as the Oak Resources Conservation Ordinance ("Ordinance").

130.39.020 Applicability

With the exception of exempt activities listed in Section 130.39.050 (Exemptions and Mitigation Reductions) below in this Chapter, the requirements of this Ordinance shall apply to both ministerial and discretionary development resulting in impacts to Oak Resources as defined in this Chapter. This Chapter shall apply to all privately-owned lands within the unincorporated area of the County at or below the elevation of 4,000 feet above sea level where Oak Resources are present.

A. **Effect of Ordinance Changes on Projects or Plans in Progress.** The enactment of this Chapter or amendments hereto may have the effect of imposing different standards on development or new uses from that which previously applied. In these cases, the County shall apply the standards found in Section 130.10.040.C (Effect of Zoning Ordinance Changes on Projects in Progress), Section 130.10.040.D (Exception for Area Covered by Specific Plan) and Section 130.10.040.E (Private Agreements) in Article 1 (Zoning Ordinance Applicability) of this Title, as applicable.

130.39.030 Definitions

For the purposes of this Ordinance, the following terms and phrases shall have the meanings respectively ascribed to them by this Section:

Agricultural Cultivation/Operations: As defined by General Plan Policy 8.2.2.1.

Arborist: A person certified by the International Society of Arboriculture (ISA) that provides professional advice regarding trees in the County.

CAL FIRE: California Department of Forestry and Fire Protection.

Commercial Firewood Cutting: Fuel wood production where a party cuts firewood for sale or profit.

Conservation Easement: An easement granting a right or interest in real property that is appropriate to retaining land or water areas predominately in their natural, scenic, open, or wooded condition; retaining such areas as suitable habitat for fish, plants, or wildlife; or maintaining existing land uses.

For Conservation Easement dedication (on-site) or acquisition (off-site) as mitigation for Oak Woodlands impacts, a Conservation Easement to the satisfaction of County Counsel and the Director shall be required to ensure the long term maintenance and preservation of Oak Woodlands. The Conservation Easement shall provide for the preservation of the designated area in perpetuity and shall include such terms, conditions, and financial endowments for monitoring and management deemed necessary by the County to ensure the long term preservation of the Oak Woodlands within the easement area. The Conservation Easement shall be in favor of the County or a County-approved conservation organization.

Deed Restriction: Private agreements that restrict the use of the real estate and are listed in the deed. Restrictions travel with the deed, and cannot generally be removed by new owners.

Defensible Space: The area within the perimeter of a parcel, development, neighborhood or community where basic wildland fire protection practices and measures are implemented, in order to defend against encroaching wildfires or provide for people to escape structure fires.

Defensible space is required by any person who owns, leases, controls, operates or maintains a building or structure in or adjoining any mountainous area, forest-covered lands, brush-covered lands, grass-covered lands or any land that is covered with flammable material. PRC 4291 requires 100 feet of Defensible Space (or to the property line if less than 100 feet) from every building or structure that is used for support or shelter of any use or occupancy.

Developed Parcel:

1. A parcel zoned for a single-family residence and subdivided down to its ultimate size consistent with the zone, with or without on-site improvements, but with completed subdivision improvements;

2. A parcel zoned for multifamily, commercial, industrial or research and development use for which all discretionary entitlements or applicable Design Review Permits under Section 130.52.030 (Design Review Permit) have been approved and are effective. "Developed parcel" shall not mean any parcel which otherwise meets the requirements of this paragraph, but for which another discretionary entitlement, or a modification to an existing entitlement is being requested. Such parcels shall be treated as undeveloped parcels under this chapter.

Diameter at Breast Height (dbh): The measurement of the diameter of a tree in inches, specifically four (4) feet six (6) inches above natural grade on the uphill side of the tree. In the case of trees with multiple trunks, the diameter of all stems (trunks) at breast height shall be combined to calculate the diameter at breast height of the tree.

Fire Safe Plan: Defined in the El Dorado County General Plan (Policy 6.2.2.2) as a plan prepared by a Registered Professional Forester (RPF) and approved by the local Fire Protection District and/or California Department of Forestry and Fire Protection. The plan is prepared to demonstrate that development can be adequately protected from wildland fire hazard in areas of high and very high wildland fire hazard or in areas identified as "urban wildland interface communities within the vicinity of Federal lands that are a high risk for wildfire," as listed in the Federal Register of August 17, 2001.

Heritage Trees: Any live native oak tree of the genus *Quercus* (including blue oak (*Quercus douglasii*), valley oak (*Quercus lobata*), California black oak (*Quercus kelloggii*), interior live oak (*Quercus wislizeni*), canyon live oak (*Quercus chrysolepis*), Oregon oak (*Quercus garryana*), oracle oak (*Quercus x morehus*), or hybrids thereof) with a single main trunk measuring 36 inches dbh or greater, or with a multiple trunk with an aggregate trunk diameter measuring 36 inches or greater.

Impact: For Individual Native Oak Trees, the physical destruction, displacement or removal of a tree or portions of a tree caused by poisoning, cutting, burning, relocation for transplanting, bulldozing or other mechanical, chemical, or physical means. For oak woodlands, tree and land clearing associated with land development, including, but not limited to, grading, clearing, or otherwise modifying land for roads, driveways, building pads, landscaping, utility easements, fire-safe clearance and other development activities.

In-lieu Fee: Cash payments that may be paid into the County's Oak Woodland Conservation Fund by an owner or developer as a substitute for a Deed Restriction, Conservation Easement or replacement planting. In-lieu fee amounts for Individual Native Oak Trees, Heritage Trees, and Oak Woodlands as presented in the ORMP may be adjusted by the County over time to reflect changes in land values, labor costs, and nursery stock costs.

Individual Native Oak Tree(s): Any live native oak tree of the genus *Quercus* (including blue oak (*Quercus douglasii*), valley oak (*Quercus lobata*), California black oak (*Quercus kelloggii*), interior live oak (*Quercus wislizeni*), canyon live oak (*Quercus chrysolepis*), Oregon oak (*Quercus garryana*), oracle oak (*Quercus x morehus*), or hybrids thereof) with a single main trunk measuring greater than 6 but less than 36 inches dbh, or with a multiple trunk with an aggregate trunk diameter measuring greater than 10 inches dbh and is not a Heritage Tree .

Oak Resources: Collectively, Oak Woodlands, Individual Native Oak Trees, and Heritage Trees.

Oak Resources Technical Report: A stand-alone report prepared by a Qualified Professional containing information, documents and formatting as specified in Section 2.5 (Oak Resources Technical Reports) of the ORMP.

Oak Tree Removal Permit: A permit issued by the County allowing removal of individual native oak trees not located within an oak woodland. An oak resources technical report shall accompany any tree removal permit application submitted to the County. Conditions of approval may be imposed on the permit. If a tree removal permit application is denied, the County shall provide written notification, including the reasons for denial, to the applicant. Oak tree removal permit processing and approval will be conducted concurrently with the environmental review process for discretionary projects or concurrent with other permit review and processing for ministerial projects (e.g., building permits).

Oak Woodland Conservation Fund: A fund set up by the County to receive in-lieu fees (Oak Woodland In-Lieu Fee and Individual Tree In-Lieu Fee) which shall be used to fund the acquisition of land and/or Oak Woodlands Conservation Easements from willing sellers, native oak tree planting projects, and ongoing conservation area monitoring and management activities, including but not limited to fuels treatment, weed control, periodic surveys, and reporting.

Oak Woodland(s): An oak stand with a greater than 10 percent canopy cover or that may have historically supported greater than 10 percent canopy cover (California Fish and Game Code Section 1361).

Oak Woodland Removal Permit: A permit issued by the County allowing removal of oak trees that are a component of an oak woodland. An oak resources technical report shall accompany any oak woodland removal permit application submitted to the County. Conditions of approval may be imposed on the permit. If an oak woodland removal permit application is denied, the County shall provide written notification, including the reasons for denial, to the applicant. Oak woodland removal permit processing and approval will be conducted concurrently with the environmental review process for discretionary projects or concurrent with other permit review and processing for ministerial projects (e.g., building permits).

Qualified Professional: An arborist certified by the International Society of Arboriculture (ISA), a qualified wildlife biologist, or a Registered Professional Forester (RPF).

Qualified Wildlife Biologist: A professional with a BA or BS or advanced degree in biological sciences or other degree specializing in the natural sciences; professional or academic experience as a biological field investigator, with a background in field sampling design and field methods; taxonomic experience and knowledge of plant and animal ecology; familiarity with plants and animals of the area, including the species of concern; and familiarity with the appropriate county, state, and federal policies and protocols related to special status species and biological surveys.

Registered Professional Forester (RPF): A Registered Professional Forester (RPF) is a person licensed by the State of California to perform professional services that require the application of forestry principles and techniques to the management of forested landscapes. RPFs have an understanding of forest growth, development, and regeneration; soils, geology, and hydrology; wildlife and fisheries biology and other forest resources. RPFs are also trained in fire management and, if involved in timber harvesting operations, have expertise in both forest road design and application of the various methods used to harvest.

130.39.040 - Prohibition

With the exception of exempt activities listed in Section 130.39.050 (Exemptions and Mitigation Reductions) below in this Chapter, no person shall remove, or otherwise cause an impact to Oak Resources located wholly or partially within the unincorporated areas of the County unless the requirements of this chapter are fully met and a permit has been obtained.

130.39.050 Exemptions and Mitigation Reductions

Oak resources impact mitigation is required for any non-exempt action requiring discretionary development entitlements or approvals from El Dorado County, or ministerial actions requiring a building permit or grading permit issued by El Dorado County. With the exception of dead, dying, and diseased trees, as discussed in Section 130.39.050.I (Dead, Dying, or Diseased Trees) below in this Section, all impacts to Heritage Trees, individual valley oak trees, and valley oak woodlands shall be subject to the provisions and mitigation requirements contained in the ORMP, regardless of whether or not the action requires a development permit. With the above noted exceptions, the provisions of this Chapter do not apply to the following activities, uses, and structures, except where provisions of a memorandum of understanding between the County and another governmental agency provide for County regulatory authority or otherwise provided by law:

A. **Existing Single-Family Parcels.** Projects or actions occurring on parcels of 1 acre or less allowing a single-family residence by right, and that cannot be further subdivided without a General Plan Amendment or Zone change are exempted from the mitigation requirements included in this Chapter.

B. **Fire Safe Activities.** Actions taken pursuant to an approved Fire Safe Plan for existing structures, or a Community Wildfire Protection Plan, or in accordance with Defensible Space maintenance requirements for existing structures as identified in California Public Resources Code (PRC) Section 4291 are exempted from the mitigation requirements included in this Chapter. Oak resources impacts for initial Defensible Space establishment for new development are not exempt from the mitigation requirements included in this Chapter.

In addition, fuel modification activities outside of Defensible Space areas that are associated with fuel breaks, corridors, or easements intended to slow or stop wildfire spread, ensure the safety of emergency fire equipment and personnel, allow evacuation of civilians, provide a point of attack or defense for firefighters during a wildland fire, and/or prevent the movement of a wildfire from a structure to the vegetated landscape, where no grading permit or building permit is applicable, are exempted from the mitigation requirements included in this Chapter.

C. **Utility Line Location, Construction and Maintenance.** Actions associated with location and construction of new electrical energy facilities as specified in Subsection 130.10.040.B (Exemptions from Zone Ordinance Requirements) in Article 1 (Zoning Ordinance Applicability) of this Title, or actions taken to maintain safe operation of existing utility facilities in compliance with state regulations (PRC 4292-4293 and California Public Utilities Commission (CPUC) General Order 95) are exempted from the mitigation requirements included in this Chapter.

D. **County Road Projects.** Road widening and realignment projects necessary to increase capacity, protect public health, and improve safe movement of people and goods in existing public rights-of-way (as well as acquired rights-of-way necessary to complete the project) where the new alignment is dependent on an existing alignment are exempted from the mitigation requirements included in this Chapter. New proposed roads within the County's General Plan Transportation and Circulation Element and internal circulation roads within new or proposed development are not exempt.

E. **Affordable Housing.** Affordable housing projects for lower income households, as defined pursuant to Section 50079.5 of the California Health and Safety Code, that are located within an urbanized area, or within a sphere of influence as defined pursuant to California Government Code §56076 are exempted from the mitigation requirements included in this Chapter.

F. **Agricultural Activities.** With the exception of uses/activities that require issuance of a Conditional Use Permit, and when such uses/activities are otherwise consistent with other provisions of County Code Title 130 (Zoning Ordinance), the following types of agricultural activities are exempted from the mitigation requirements included in this Chapter:

1. Agricultural activities conducted for the purposes of producing or processing plant and animal products or the preparation of land for this purpose;

2. Agricultural Cultivation/Operations, whether for personal or commercial purposes (excluding commercial firewood operations); and

3. Activities occurring on lands in Williamson Act Contracts or under Farmland Security Zone Programs.

G. **Emergency Operations.** Actions taken during emergency firefighting operations or responses to natural disasters (e.g., floods, landslides, avalanches, etc.) and associated post-fire or post-disaster remediation activities are exempted from the mitigation requirements included in this Chapter.

H. **Timber Harvest Plan.** Tree removal permitted under a Timber Harvest Plan approved by CAL FIRE is exempted from the mitigation requirements included in this Chapter.

I. **Dead, Dying, or Diseased Trees.** Individual native oak tree removal (including individual valley oak trees and valley oak trees within valley oak woodlands) is exempted from the mitigation requirements included in this Chapter when:

1. The tree is dead, dying, or diseased, as documented in writing by a Certified Arborist or Registered Professional Forester; and/or

2. The tree exhibits high failure potential with the potential to injure persons or damage property, as documented in writing by a Certified Arborist or Registered Professional Forester.

J. **Exemption for Personal Use.** Removal of a native oak tree, other than a Heritage Tree or individual valley oak trees and valley oak woodlands, when it is cut down on the owner's property for the owner's personal use, is exempted from the mitigation requirements included in this Chapter provided that no more than 8 trees are removed from a single parcel per year and provided that the total diameter inches at breast height (dbh) of trees removed from a single parcel per year does not exceed 140 inches.

K. **Mitigation Reductions for Affordable Housing.** Non-exempt affordable housing projects may qualify for partial oak woodland mitigation credit. Specifically, development projects that propose a minimum of 10 percent of the dwelling units as income restricted affordable units, as defined by California Health and Safety Code §50052.5, 50053, and 50093, shall be granted a reduction in the amount of oak woodland that is required to be mitigated, as set forth in Table 2 (Affordable Housing Mitigation Reduction) in the ORMP. The reduction is to be applied to the mitigation ratio presented in Table 3 (Oak Woodland Mitigation Ratios) in the ORMP and shall only be applied to the residential portion(s) of the proposed project. This reduction for affordable housing projects does not apply to removal of Heritage Trees or individual valley oak trees. This reduction for affordable housing projects also does not apply to impacts to valley oak woodlands. This reduction for affordable housing projects applies to impacts to other oak woodland habitat and removal of other individual oak trees. In no case shall the mitigation requirement be less than zero.

Table 2 (ORMP)
Affordable Housing Mitigation Reduction

Affordable Housing Type (Household Income Level)	Percent Oak Woodland Mitigation Reduction (for portion of project that is income restricted)
Very Low	200%
Lower	100%
Moderate	50%

Source: ORMP, Section 2.1.11 (Mitigation Reductions for Affordable Housing)

Example: A project proposes 25% of the units to be affordable in the Lower income category. The oak woodland mitigation ratio may be reduced by 25%. A Moderate income project that provides all units at that income level may reduce the oak woodland mitigation ratio by 50%. A project with 20% Very Low income units would receive a 40% reduction in oak woodland mitigation ratio.

130.39.060 Oak Tree and Oak Woodland Removal Permits – Ministerial Development Projects.

An Oak Tree and/or Oak Woodland Removal Permit shall be required for all non-exempt ministerial (e.g. building permit-related) development activities with impacts to Oak Resources on a Developed Parcel as defined in this Chapter. Oak Tree and Oak Woodland Removal Permits shall contain the following minimum information as specified below:

A. **Administrative Permit**. For purposes of this Chapter, Oak Tree and Oak Woodland Removal Permits shall be processed as an Administrative Permit pursuant to Section 130.52.010 (Administrative Permit, Relief, or Waiver) in Article 5 (Planning Permit Processing) of this Title.

B. **General Permit Requirements.** Application for an Oak Tree or Oak Woodland Removal Permit shall be made by filing a completed application form with the Director. The form shall require the following minimum information:

1. A Code Compliance Certificate, on a form approved by the Director, verifying that no Oak Resources have been impacted within two years prior to submittal of permit application;

2. An Oak Resources Technical Report as defined in this Chapter;

3. Condition of the Oak Resource(s) subject to Impact;

4. Site/Plot plan of affected parcel(s) as required by Administrative Permit requirements;

5. Reason and objective for Impact;

6. Any other information as determined by the Director to be necessary or convenient to evaluate the request.

C. **Oak Tree and Oak Woodland Removal Permits – Permit Processing**

1. The director shall issue an Oak Tree or Oak Woodland Removal Permit pursuant to Administrative Permit processing requirements.

2. The property owner shall be required to mitigate Oak Resources impacts as shown in Section 130.39.060.D (Mitigation-Oak Woodland Removal) and/or Section 130.39.060.E (Mitigation – Individual Native Oak Tree/Heritage Tree Removal) below in this Section.

D. **Mitigation – Oak Woodland Removal.** If identified Oak Woodlands will be impacted as part of the permit, the applicant shall mitigate for loss of Oak Woodlands by In-lieu Fee payment to the Oak Woodland Conservation Fund. Fee payment shall be based on the percent of on-site Oak Woodlands impacted by the development as shown in Table 5 (Oak Woodland In-Lieu Fee) in the ORMP.

Ministerial development projects where alternate mitigation is requested, such as replacement planting or Oak Woodlands conservation (either on-site or off-site) will require a Minor Use Permit pursuant to Section 130.52.020 (Minor Use Permit) in Article 5 (Planning Permit Processing) of this Title and/or other permit(s) as required for review of the project by the County Code of Ordinances. Such requests shall be processed as a discretionary development project as specified in Section 130.39.070 (Oak Tree and Oak Woodland Removal Permits – Discretionary Development Projects) below in this Chapter. Replacement planting shall be consistent with Section 2.4 (Replacement Planting Guidelines) of the ORMP.

E. **Mitigation – Individual Native Oak Tree/Heritage Tree Removal.** If Individual Native Oak Trees, including Heritage Trees, regardless of location within or outside of an oak woodland, will be impacted as part of the permit, the applicant shall mitigate for loss of individual tree(s) by In-lieu Fee payment to the Oak Woodland Conservation Fund. In Lieu Fee payment for individual oak tree removal shall be as shown in Table 6 (Individual Oak Tree In-Lieu Fee) in the ORMP.

Ministerial development projects where alternate mitigation is requested, such as replacement planting (either on-site or off-site), will require a Minor Use Permit pursuant to Section 130.52.020 (Minor Use Permit) in Article 5 (Planning Permit Processing) of this Title and/or other permit(s) as required for review of the project by the County Code of Ordinances. Such requests shall be processed as a discretionary development project as specified in Section 130.39.070 (Oak Tree and Oak Woodland Removal Permits – Discretionary Development Projects) below in this Chapter. Replacement planting shall be consistent with Section 2.4 (Replacement Planting Guidelines) of the ORMP.

130.39.070 Oak Tree and Oak Woodland Removal Permits – Discretionary Development Projects.

A. **Oak Tree and Oak Woodland Removal Permits**. An Oak Tree and/or Oak Woodland Removal Permit shall be a component of all discretionary projects with impacts to Oak Resources as defined in this Chapter.

B. **Commercial Firewood**. For purposes of this Section, Commercial Firewood Cutting operations shall be considered discretionary and subject to a Minor Use Permit pursuant to Section 130.52.020 (Minor Use Permit) in Article 5 (Planning Permit Processing) of this Title. In addition to the specific findings required for Minor Use Permits, a Minor Use Permit for Commercial Firewood Cutting operations shall also consider the following:

1. Whether the removal of the tree(s) would have a significant negative environmental impact;

2. Whether the proposed removal would not result in clear-cutting, but would result in thinning or stand improvement;

3. Whether replanting would be necessary to ensure adequate regeneration;

4. Whether the removal would create the potential for soil erosion;

5. Whether any other limitations or conditions should be imposed in accordance with sound tree management practices; and

6. What the extent of the resulting oak woodland coverage would be.

C. **Mitigation Requirement.** Impacts to oak resources on a property subject to a discretionary approval shall be addressed in the discretionary application review process and shall be incorporated as conditions of project approval.

1. **Mitigation – Oak Woodlands Removal.** If identified Oak Woodlands will be impacted as part of the permit, the applicant shall mitigate for loss of oak woodlands. Mitigation shall occur at the ratio identified in Table 3 (Oak Woodland Mitigation Ratios) using one or more of the following options as specified in the ORMP:

   a. In-lieu Fee payment based on the percent of on-site Oak Woodland impacted by the development as shown in Table 5 (Oak Woodland In-Lieu Fee) in the ORMP to be either used by the County to acquire off-site deed restrictions and/or conservation easements or to be given by the County to a land conservation organization to acquire off-site deed restrictions and/or conservation easements;

b. Off-site Deed Restriction or Conservation Easement acquisition for purposes of off-site oak woodland conservation consistent with Chapter 4.0 (Priority Conservation Areas) of the ORMP;

c. Replacement planting within an area on-site for up to 50 percent of the total Oak Woodland mitigation requirement consistent with Section 2.4 (Replacement Planting Guidelines) of the ORMP. This area shall be subject to a Deed Restriction or Conservation Easement;

d. Replacement planting within an area off-site for up to 50 percent of the total Oak Woodland mitigation requirement. Off-site replacement planting areas shall be consistent with Section 2.4 (Replacement Planting Guidelines) and Chapter 4.0 (Priority Conservation Areas) of the ORMP. This area shall be subject to a Deed Restriction or Conservation Easement; or

e. A combination of options a through d above.

2. **Mitigation – Individual Native Oak Tree/Heritage Tree Removal.** If Individual Native Oak Trees, including Heritage Trees, will be impacted as part of the permit, the applicant shall mitigate for loss of individual tree(s) by one or more of the following options as specified in the ORMP:

a. In-lieu Fee payment for individual oak tree removal to be either used by the County to plant oak trees or to be given by the County to a land conservation organization to plant oak trees as shown in Table 6 (Individual Oak Tree In-Lieu Fee) in the ORMP;

b. Replacement planting on-site consistent with Section 2.4 (Replacement Planting Guidelines) of the ORMP within an area subject to a Deed Restriction or Conservation Easement and utilizing the replacement tree sizes and quantities shown in Table 4 (Oak Tree Replacement Quantities) in the ORMP. On-site replacement planting shall be consistent with Section 2.4 (Replacement Planting Guidelines) of the ORMP;

c. Replacement planting off-site within an area subject to a Conservation Easement or acquisition in fee title by a land conservation organization utilizing the replanting sizes and quantities specified in Table 4 (Oak Tree Replacement Quantities) in the ORMP. Off-site replacement planting shall be consistent with Section 2.4 (Replacement Planting Guidelines) of the ORMP; or

d. A combination of options a through c above.

Table 3 (ORMP)
Oak Woodland Mitigation Ratios

Percent of Oak Woodland Impact	Oak Woodland Mitigation Ratio
0-50%	1:1
50.1-75%	1.5:1
75.1-100%	2:1

Source: ORMP, Section 2.2.2 (Oak Woodland Mitigation)

Table 4 (ORMP)
Oak Tree Replacement Quantities

Replacement Tree Size	Number of Trees Required Per Inch of Trunk Diameter Removed
Acorn	3
1-gallon/TreePot 4	2
5-gallon	1.5
15-gallon	1

Source: ORMP, Section 2.3.2 (Oak Tree Mitigation)

D. **Oak Resources Technical Report.** An Oak Resources Technical Report shall accompany any discretionary development project and include all pertinent information, documents and recommended mitigation as specified in the ORMP. Oak Resources shall not be removed from such property until the discretionary review process is completed and a permit has been issued.

E. **Code Compliance Certificate.** A Code Compliance Certificate, on a form approved by the Director, shall be submitted verifying that no Oak Resources have been impacted within two years prior to application submittal.

F. **Security Deposit for On-Site Oak Tree/Oak Woodland Retention.** If Oak Resources are identified for on-site retention as part of a discretionary project, a bond or other security instrument in an amount not less than ten thousand dollars shall be required as a condition of issuance of the discretionary permit and/or authorization to protect any Individual Native Oak Trees and/or Oak Woodlands identified for preservation during the construction period. The form and amount of the security instrument shall be specified by the permit issuing body and approved by County Counsel. No grading or other on-site work shall be permitted until the security is posted.

G. **Security Deposit for On-Site Oak Tree/Oak Woodland Replacement Planting.** If oak tree replacement planting is proposed for a discretionary project, the applicant shall post a bond or other security instrument in an amount equal to the current value of required replacement tree(s) and/or acorns, plus the cost of maintenance and monitoring, as determined by a Qualified Professional. The security instrument shall be for a term of either seven years from the date of issuance of an oak tree/oak woodland removal permit, or from the date of the last replacement tree(s) planted as mitigation for the project, whichever is greater. The form and amount of the security

instrument shall be specified by the permit issuing body and approved by County Counsel. No grading or other on-site work shall be permitted until the security is posted.

130.39.080 In-Lieu Fee Appeals

A. **In-Lieu Fee Appeals.** Appeals of In-Lieu Fees may be granted by the Director under any one of the following scenarios:

1. The requirements of this chapter have been incorrectly applied; and/or

2. That application of the requirements of this chapter is unlawful under and/or conflict with federal, state, or local law and/or regulation including constituting an unlawful taking of property without just compensation.

B. **Application for Appeals of In-Lieu Fees**. Application must be made no later than the date of application for building, grading and/or other ministerial development permit(s) with Impacts to Oak Resources. Application shall be on a form provided by the County, and shall include payment of fees as established in the ORMP. The burden of establishing by satisfactory factual proof the applicability and elements of this Section shall be on the Applicant. The Applicant must submit full information in support of their submittal as requested by the Director. Failure to raise each and every issue that is contested in the application and provide appropriate support evidence will be grounds to deny the application and will also preclude the Applicant from raising such issues in court. Failure to timely submit such an application shall constitute a failure to exhaust administrative remedies that shall preclude such person from challenging In-Lieu Fees in court. The Director may require at the expense of the applicant, review of the submitted materials by a third party.

C. **Written Determination.** The County shall mail the applicant a final, written determination on the application for a reduction and/or appeal. The applicant may appeal the Department's decision to the Director. The Director's decision shall be final and not administratively appealable.

130.39.090 Enforcement

A. **Fines.** As established in ORMP Sections 2.2.1 (Oak Woodland Removal Permits) and 2.3.1 (Oak Tree Removal Permits), fines shall be issued to any person, firm, or corporation that is not exempt from the standards included in the ORMP who impacts an Oak Resource without first obtaining an Oak Tree and/or Oak Woodland Removal Permit.

1. **Unpermitted Removal of Oak Woodland**. For unpermitted removal of oak woodland, fines may be issued in an amount up to three times the current oak woodland in-lieu fee amount, based on the area of oak woodland removed.

2. **Unpermitted Removal of Individual Native Oak Trees**. For unpermitted removal of individual native oak trees, fines may be issued in an amount up to three times the current market value of replacement trees, including the estimated cost of replacement, and/or the cost of replacement of up to three times the number of required replacement trees.

3. **Unpermitted Heritage Tree Removal**. For unpermitted removal of any Heritage Tree, fines may be issued in an amount up to nine times the current market value of replacement trees, including the estimated cost of replacement, and/or the cost of replacement of up to 9 times the number of required replacement trees.

B. **Other Penalties.** In addition to fines, if an Oak Resource is impacted without an Oak Woodland and/or Oak Tree Removal Permit, any and all applications for development of that property shall be deemed incomplete unless and until the property owner enters into a settlement agreement with the County or all code enforcement and/or criminal proceedings are complete and all penalties, fines and sentences are paid or fulfilled.

130.39.100 Mitigation Maintenance, Monitoring and Reporting

Required care, inspection and documentation of replacement oak trees, including acorns, when planted as mitigation for loss of oak woodlands, loss of individual native oak tree(s) or Heritage Tree(s) shall be consistent with all applicable provisions of the ORMP Section 6.0 (Definitions - Mitigation Maintenance, Monitoring and Reporting), including annual monitoring and replacement of any dead trees for a period of 7 years from the date of planting.

A. **Annual Monitoring and Reporting – Oak Tree/Oak Woodland Removal Permits and Enforcement Actions.** The County shall monitor all Oak Tree and Oak Woodland Removal Permits and any enforcement actions on an annual basis. The County shall provide the results of this monitoring to the Board of Supervisors in the form of an annual report. The report shall include the quantity of permits issued and estimated inches/acres approved for removal during the reporting year.

B. **Biennial Reporting - Oak Woodland Conservation Fund Fees.** The County shall monitor all In-lieu Fees deposited into the Oak Woodland Conservation Fund and provide a report documenting fees collected and recommend fee adjustment(s), as appropriate, to the Planning Commission and Board of Supervisors every other March, as specified in Appendix A of the ORMP.

ARTICLE 4 – SPECIFIC USE REGULATIONS

CHAPTER 130.40 – SPECIFIC USE REGULATIONS

Sections:

130.40.010 Content of Chapter
130.40.020 Applicability
130.40.030 Accessory Structures and Uses
130.40.040 Adult Business Establishments
130.40.050 *Reserved*
130.40.060 Agricultural Preserves and Zones: Contracts, Criteria, and Regulations
130.40.070 Agricultural Support Services
130.40.080 Animal Raising and Keeping
130.40.090 *Reserved*
130.40.100 Campgrounds and Recreational Vehicle Parks
130.40.110 Child Day Care Facilities
130.40.120 Commercial Caretaker, Agricultural Employee, and Seasonal Worker Housing
130.40.130 Communication Facilities
130.40.140 *Reserved*
130.40.150 Guest House
130.40.160 Home Occupations
130.40.170 Lodging Facilities
130.40.180 Mixed Use Development
130.40.190 Mobile/Manufactured Homes
130.40.200 *Reserved*
130.40.210 Outdoor Recreational Facilities
130.40.220 Outdoor Retail Sales
130.40.230 Private Schools in Light Manufacturing Facilities
130.40.240 Produce Sales
130.40.250 Public Utility Infrastructure
130.40.260 Ranch Marketing
130.40.270 *Reserved*
130.40.280 Recycling Facilities
130.40.290 Right to Farm
130.40.300 Secondary Dwellings
130.40.310 Solar Collection Systems
130.40.320 Storage Facilities
130.40.330 Temporary Real Estate Sales Offices
130.40.340 *Reserved*
130.40.350 Timber Production Zone: Criteria, Regulations, and Zone Change Requirements
130.40.360 Transitional Housing
130.40.370 *Reserved*
130.40.380 Vehicle Maintenance, Repair, and Storage Accessory to a Residential Use
130.40.390 Wind Energy Conversion Systems
130.40.400 Wineries (Adopted)

THIS PAGE INTENTIONALLY LEFT BLANK

130.40.010 Content of Chapter

This Chapter contains regulations applicable to certain specified uses that may be allowed, either by right or by discretionary permit, in a number of different zones. This Chapter provides appropriate standards for the design, location, and operation of the specific uses consistent with the General Plan.

130.40.020 Applicability

The provisions contained in this Chapter shall apply to all land in the unincorporated part of El Dorado County regardless of zone, unless otherwise specified in this Chapter.

130.40.030 Accessory Structures and Uses

A. **Accessory Uses and Their Determination.** In addition to the principal use or uses expressly established for the zone, as specified in Chapters 130.21 (Agricultural, Rural, and Resources Zones) through 130.25 (Special Purpose Zones) inclusive, in Article 2 (Zones, Allowed Uses, and Zoning Standards) of this Title each use shall include such accessory uses which are customarily associated with the principal use(s). For those uses not specifically identified in the use matrices for the zones, the Director shall determine whether such use is customarily associated with the principal use of the zone.

B. **Exemption.** Agricultural buildings, small sheds or other storage structures that do not require a building permit for installation under Title 110 (Buildings and Construction), Section 110.16.060 (International Building Code, Appendix Chapter 1, Section 105.2–Work exempt from permit) pursuant to applicable building code provisions shall be exempt from the provisions of this Title, but shall remain subject to the setback requirements of the zone.

C. **Relationship of Accessory Use or Structure to Primary Use.**

1. Accessory uses and structures shall be consistent with the primary use.

2. For purposes of this Section, barns, stables, and other structures used to store crops and feed, shelter livestock, or house agriculturally-related machinery shall be allowed as a primary use, subject to the development standards for the zone (See Chapter 130.21: Agricultural, Rural, and Resources Zones) in Article 2 (Zones, Allowed Uses, and Zoning Standards) of this Title. When allowed in the residential zones, R1, R20K, R1A and R2A said structures shall be accessory to an existing primary residence, except where the existing parcel is larger than 10 acres. In R3A and RE zones, said structures shall be allowed as a primary use.

3. Accessory uses and structures shall be established or constructed at the same time or after the establishment or construction of the primary use or structure on a lot, except where earlier establishment or construction is authorized by Administrative Permit.

4. Where building permits are issued concurrently for the primary and accessory structures, the permit for the accessory structure may be approved for final occupancy prior to completing the primary structure.

D. **Residential Accessory Structures Uses.** In addition to the primary dwelling, the following residential accessory structures and uses that are customarily associated with the primary structure shall be allowed in compliance with specific regulations under this Chapter, development standards of the respective zone, and Article 3 (Site Planning and Project Design Standards) of this Title:

1. Garages, carports, and storage sheds.

2. Swimming pools and spas.

3. Shade structures, arbors, trellises, and gazebos.

4. Decks and other outdoor residential amenities such as outdoor kitchens and free standing fireplaces with chimneys.

5. Barns, stables, and other animal shelters, where the keeping of animals is allowed in the zone.

6. Accessory structures providing habitable space subject to the following:

   a. A structure no greater than 600 square feet that is designated a guest house as defined in Article 8 (Glossary: see "Guest House") of this Title, shall be subject to the requirements of Section 130.40.150 (Guest House) in this Chapter.

   b. A structure up to 1,600 square feet that is designated a secondary dwelling as defined in Article 8 (Glossary: see "Secondary Dwelling") of this Title, shall be subject to the requirements of Section 130.40.300 (Secondary Dwellings) in this Chapter.

   c. A structure to be used by the property owner as a pool house, workshop, artist studio, as defined in Article 8 (Glossary) of this Title, or other similar use, may contain a full bathroom along with the changing room or work area, but shall not contain kitchen and/or cooking facilities nor be utilized for housing residents or guests.

7. Alternative energy systems, such as solar or wind energy collection systems, subject to the requirements of Sections 130.40.310 (Solar Collection Systems) and 130.40.390 (Wind Energy Conversion Systems) in this Chapter.

8. Activities typically associated with residential uses are allowed on all parcels occupied by a residential use. Examples of such residential accessory uses include vehicle parking, gardens, vehicle and boat storage, the keeping of domestic pets (as defined in Title 6 [Animals]) of the County Code of Ordinances, composting of household organic and yard waste, and other similar activities.

130.40.040 Adult Business Establishments

A. **Content.** This Section regulates the time, location, and manner of operating adult (sex oriented) business establishments in compliance with California Government Code Section 65850.4, in order to protect the public health, safety, and welfare. This Section is establishes reasonable and uniform regulations to prevent any deleterious location and concentration of adult business establishments within the County, thereby reducing or eliminating the adverse secondary effects experienced by other cities and counties, such as crime, blight, and downgrading of the surrounding commercial districts and residential neighborhoods. Location of said establishments along U.S. Highway 50 will be regulated in order to preserve the commercial, residential, and scenic character of not only its main transportation corridor, but what is considered to be the "gateway" to the County.

B. **Applicability.** The regulations and standards within this Section shall apply to adult business establishments, as defined in Article 8 (Glossary: See "Adult Business Establishment") of this Title, where allowed in the use matrices for the zones, under the following forms:

1. **New Business.** The opening or commencement of operation of a business as a new business.

2. **Conversion of an Existing Business.** The conversion of an existing business, whether an adult business or not, to an adult business establishment.

3. **Enlargement of Existing Business.** The addition of an adult business to an existing adult business if the addition results in enlargement of the place of business. For the purpose of this Subsection (Applicability), enlargement shall mean an increase in the size of the structure within which the business is conducted by either construction or use of an adjacent structure or a portion of a structure, whether located on the same or an adjacent lot.

C. Prior to Administrative Permit approval, a potential adult business owner shall provide a vicinity map demonstrating that the adult business is not being established

or located within 300 feet of U.S. Highway 50 and within 1,000 feet of the following existing uses:

1. Any zone that allows residential uses by right;

2. Any house of worship or any noncommercial establishment operated by a bona fide religious organization;

3. Any public library, public building, or other public facility;

4. Any public, private, or parochial school, pre-school, child day care center, park, or playground, or any establishment or facility likely to be used by minors; and

5. Any other adult business.

D. For the purposes of this Section, distances shall be measured in a straight line, without regard to intervening structures, from the nearest point of the structure in which the adult business will be located to the nearest property line of a use or zone described in Subsection C above.

E. No adult business establishment shall be open nor shall any activity described in this Section be conducted or carried on in the business premises between the hours of 10:00 p.m. and 10:00 a.m. of any day.

F. Signs or structures, advertisements, displays, or other promotional material depicting "specified anatomical areas" or "specified sexual activities", as defined under Title 5 (Business Taxes, Licenses and Regulations), Subsection 5.34.020 (Definitions) See: "Adult-related Establishments) of the County Code of Ordinances, or displaying instruments, devices or paraphernalia designed for use in connection with "specific sexual activities", shall not be exhibited or shown in a way that is visible from an exterior area.

G. Structure openings, entries, and windows shall be located, covered, or screened to prevent viewing the interior from an exterior area.

H. Loudspeakers or sound equipment audible to persons in a public area shall not be used in connection with an adult business, and the business shall be conducted so that sounds associated with the business are not emitted beyond the exterior walls of the structure in which the use is occurring.

I. Dumpsters used by an adult business establishment shall be locked when not in use to prevent access thereto by the public.

130.40.050 ***Reserved***

130.40.060 Agricultural Preserves and Zones: Contracts, Criteria and Regulations

A. **Content.** This Section implements the provisions of the Land Conservation Act of 1965 (Williamson Act) and the farmland security zone legislation (California Government Code Chapters 51200 et seq. and 51296 to 7, respectively) and provides criteria for zoning and protecting the existing agricultural resources of the County.

B. **Criteria for Establishment of Agricultural Preserves.** In order to establish a new Agricultural Preserve, hereinafter referred to as "Preserve", a property owner must enter into a Williamson Act Contract with the County subject to the provisions and criteria set forth in California Government Code Chapter 51200 et seq. and Resolutions adopted by the Board establishing Williamson Act criteria, as amended from time to time, and the following:

1. **Zone Change.** The property shall be zoned to Planned Agricultural (PA), Limited Agricultural (LA), or Agricultural Grazing (AG) with the approval and establishment of a Preserve, subject to the specific provisions of Subsection 130.21.010 (Zones Established; Applicability), Subsections C.1 (Planned Agricultural (PA), C.2 (Limited Agricultural (LA) and C.3 (Agricultural Grazing) in Article 2 (Zones, Allowed Uses, and Zoning Standards) of this Title.

2. **Term.** The initial term of a contract is ten years, calculated from January 1 of the same year it is approved in. On each anniversary date of a contract, a year shall be automatically added to the initial term unless written Notice of Non-Renewal is given as provided in Subsection D (Non-Renewal of Williamson Act Contracts/Agricultural Preserves) below in this Section. If the property owner or the County serves written Notice of Non-Renewal in any year, the contract shall remain in effect for the balance of the unexpired term.

C. **Preserve Standards.**

1. **Minimum Acreage.** The minimum acreage of a Preserve shall be:

   a. 20 acres for high intensive farming operations or 50 acres for low intensive farming operations, consisting of a single lot or contiguous lots; or

   b. At least ten acres but less than 20 acres upon a positive recommendation from the Ag Commission and approval by the Board if the property meets all land suitability requirements for agricultural potential, and the lot was or contiguous lots were in existence as of March 23, 1993.

2. **Use and Structures.** The use of the property shall be limited during the term of the contract to agricultural and compatible uses. Structures may be erected

and/or enlarged on the property if they are directly related to and compatible with uses allowed in Table 130.21.020 (Agricultural, Rural Lands and Resource Zone Districts Use Matrix) in Article 2 (Zones, Allowed Uses, and Zoning Standards) of this Title. Non-compatible uses permitted in the Zone District may be permitted by CUP and require a recommendation from the Ag Commission.

3. **Residential Development.** In addition to a primary dwelling, one secondary dwelling may be allowed within a Preserve by Administrative Permit approval in compliance with Section 130.52.010 (Administrative Permit, Relief, or Waiver) in Article 5 (Planning Permit Processing) of this Title, providing all of the following findings regarding the secondary dwelling can be made:

   a. It complies with all other zone setbacks and development standards, including agricultural buffer setbacks, if applicable;

   b. It is consistent with the terms of the applicable Agricultural Preserve Contract; and is incidental to the agricultural use of the land;

   c. It is consistent with the principles of compatibility in compliance with California Government Code Section 51238.1(a), as determined by the Ag Commission.

D. **Non-Renewal of Williamson Act Contracts/Agricultural Preserves.** In compliance with California Government Code Section 51245, a Notice of Non-Renewal shall be processed according to the following procedures:

1. A written Notice of Non-Renewal (Notice) shall be submitted by the property owner and a copy provided to the Board at least 90 days prior to the contract renewal date, which would be by October 1 for the upcoming year.

2. A Notice of Non-Renewal, initiated by the County, shall be submitted to the property owner at least 60 days prior to the annual contract renewal date.

3. Upon receiving a Notice, the Clerk of the Board shall forward such Notice to the Department, the Assessor, and the Ag Commission for a report.

4. The Department shall submit a written report to the Ag Commission indicating whether the Notice is for a partition, a roll out, or a partial roll out, and other relative information regarding the agricultural preserve, with a copy to the Board.

5. When the Notice is for a partition or partial roll out, the remaining parcels under contract will be required to meet the minimum Williamson Act Contract criteria specified by the County. The Ag Commission shall be required to make a recommendation, to the Board, on the viability of the remaining

parcels within the Williamson Act Contract (WAC). If the remaining parcels meet the minimum criteria for a WAC, the existing contract shall be amended to reflect the changes to the parcel descriptions or boundary lines.

6. When the Notice concerns a complete Non-Renewal (total roll out of a contract), the Ag Commission may submit a report to the Board giving an evaluation of the potential impacts resulting from the Notice.

7. The Board shall receive and file the Notice and direct the County Assessor to begin the roll-out procedure, or when partial roll-out has been requested and it has been determined by the Board that the remaining portion of the agricultural preserve no longer meets the minimum criteria to qualify as an agricultural preserve, direct the Clerk of the Board to file a Notice of Non-Renewal for the entire contract.

E. **Breach of Contract.** The County shall file a Notice of Non-Renewal (Notice) when the Board finds that a breach of contract has occurred, when the property no longer meets minimum criteria as a Preserve, or when the remaining property in a partial roll out no longer qualifies as a Preserve under the Williamson Act.

1. Prior to the Board's decision, the Ag Commission shall hold a hearing to determine if the terms of the contract have been violated. The Ag Commission may provide an opportunity for the operator to bring the agricultural operation into compliance or may recommend to the Board that the Notice be filed.

2. A hearing to determine compliance with the terms of the contract shall be held by the Board prior to filing the Notice. The property owner shall be provided written notice of all hearings.

3. Upon the Board's decision not to renew the contract, the County shall serve a written Notice upon the property owner at least 60 days prior to the contract renewal date, which would be by November 1 for the upcoming year.

4. In the case where certain structure(s) are placed within an agricultural preserve that qualify as a material breach of contract under State law, additional remedies may be applied, including the payment of penalties, in compliance with the requirements under said California Government Code Section 51250, as amended from time to time.

F. **Immediate Cancellation.** The property owner may file an application for an immediate cancellation of a Williamson Act Contract, concurrent with a zone change and General Plan amendment, if applicable, at any time during the contract period. As part of the application, the property owner must demonstrate the cancellation is consistent with the purpose of the Williamson Act so that the Board may make the necessary findings in compliance with California Government Code Section 51282, et seq. The application shall be processed as follows:

1. The Department shall forward a copy of the application to the Ag Commission and Assessor's Office for comments and recommendations.

2. The Assessor's Office shall determine the cash value of the property as though the land is free from contractual obligations and forward the report to the Department.

3. The Commission shall hold a public hearing and make a recommendation to the Board.

4. The Board shall decide at public hearing whether to approve the cancellation, zone change, and General Plan amendment, if applicable, or deny the request.

5. If approved, the applicant shall pay the amount of cancellation fees, based on the Assessor's report, prior to the effective date of cancellation.

G. **Agricultural Zones not under Williamson Act Contract.** Land to be zoned for agricultural or horticultural use that is not encumbered by a Williamson Act or farmland security zone contract must meet one of the following criteria:

1. **Soil Capability.** The site is classified as choice soil, as defined in the General Plan, based on the *Soil Survey of El Dorado Area, California* issued April 1974 by the U.S.D.A. Soil Conservation Service, or other comparable local, state or federal criteria, as further described below:

   a. Choice agricultural land, up to 30 percent slope, includes some lands in classes II, III, IV, VI, and VII, which are suitable for orchard, vineyard, and woodland; or

   b. Choice rangeland includes some lands in classes IV, VI, and VII, with range site indices of 1, 2, and 3, suitable for range use;

2. **Present Use.** Lands that are not included in one of the above soil groupings but are being actively used agriculturally may be considered for agricultural zoning when the land in question meets the three criteria of acreage, gross income, and capital outlay for establishment of an agricultural preserve, as set forth by resolution of the Board, as may be amended from time to time.

3. **Ag Commission Recommendation.** When lands do not qualify as agricultural zones under Subsections G.1.a, G.1.b, or G.2 above in this Section, they may still be zoned PA, LA or AG, based on the recommendation of the Ag Commission to the Board that there are unique circumstances applying to the land and that an agricultural zone would further the intent of the General Plan for protecting and enhancing the agricultural industry in the County.

130.40.070 Agricultural Support Services

A. **Applicability.** The standards set forth in this Section shall apply to agricultural support services, as defined in Article 8 (Glossary: See "Agricultural Support Services") of this Title, where allowed in the use matrices for the zones.

B. **Special Findings Required.** In order to approve a Conditional Use Permit for agricultural support services, the review authority must make the following findings in addition to the findings required under Section 130.52.021 (Conditional Use Permits) in Article 5 (Planning Permit Processing) of this Title:

1. The establishment of the proposed support service will support the agricultural industry in the surrounding area based on the type of agricultural enterprises that exist in the area.

2. The proposed support service will have no significant adverse effect on commercial agriculture production in the area.

C. **Uses Allowed By Right.** Uses are allowed in the zone as reflected in the matrix in Table 130.21.020 (Agricultural, Rural Lands and Resource Zone Districts Use Matrix) in Article 2 (Zones, Allowed Uses, and Zoning Standards) of this Title.

D. **Uses Requiring an Administrative Permit**. Uses allowed by Administrative Permit in compliance with Section 130.52.010 (Administrative Permit, Relief, or Waiver) in Article 5 (Planning Permit Processing) of this Title:

1. Shall have direct access to a County-maintained roadway or State Highway.

2. Shall have no impact to traffic, noise or neighboring parcels.

E. **Uses Requiring a Minor Use Permit**. Uses allowed by a Minor Use Permit in compliance with Section 130.52.020 (Minor Use Permits) in Article 5 (Planning Permit Processing) of this Title:

1. Shall have no direct access to a County-maintained roadway or State Highway.

2. Shall have a less than significant impact to traffic, noise and neighboring parcels.

3. **Review by the Agricultural Commissioner**. Where an application for a Minor Use Permit is required to construct or operate a commercial operation on agricultural or resource zoned land as an agricultural support service, the use shall be considered by the Agricultural Commissioner prior to a hearing before the review authority.

F. **Uses Requiring a Conditional Use Permit.** Uses allowed with a Conditional Use Permit in compliance with Section 130.52.021 (Conditional Use Permits) in Article 5 (Planning Permit Processing) of this Title:

1. May have significant impacts to traffic, noise, neighboring parcels and may result in a loss of productive agricultural land.

2. **Review by Ag Commission Required**. Where an application for a Conditional Use Permit is required to construct or operate a commercial operation on agricultural or resource zoned land as an agricultural support service, the use shall be considered by the Ag Commission prior to a hearing before the review authority.

130.40.080 Animal Raising and Keeping

A. **Applicability.** The standards set forth in this Section shall apply to the raising and keeping of Domestic Farm Animals for personal use, hobby purposes, educational projects, or commercial use (where allowed) on residentially zoned lands, where the use matrices for the zones allow the raising and keeping of animals.

1. The standards in this Section apply to Residential Zones that allow for animal raising and keeping, including the Single-Unit Residential (R1/R20K), One-, Two-, and Three-Acre Residential (R1A, R2A, and R3A), and Residential Estate (RE) zones.

2. The raising and keeping of domestic fowl and domestic farm animals is not allowed in the Multi-unit Residential (RM) or residential uses in Commercial zones.

3. The standards in this Section do not apply to the keeping of household pets which are addressed in Title 6 (Animals) of the County Code of Ordinances.

4. Exceptions:

a. **Agricultural, Rural Lands and Resource Zones.** These standards do not apply to the raising and keeping of animals in: (1) Agricultural zones: Limited Agricultural (A), Planned Agricultural (PA), and Agricultural Grazing (AG); and, (2) Rural Lands zones (RL); and (3) Resource zones: Forest Resources (FR), and Timber Production (TPZ).

b. **Educational Projects**. Animal Husbandry Projects shall be exempt from the requirements of Subsection C (Animal Keeping in Residential Zones), below in this Section, provided the applicable animal husbandry project protocols are followed, and the animals shall be maintained in a healthy and sanitary manner that does not violate

any section of the State of California Penal Code or Title 6 (Animals) of the County Code of Ordinances.

c. **Working Animals.** Livestock guardian or herding dogs shall be exempt from the commercial kennel requirements and managed in accordance with Title 6 (Animals) of County Code of Ordinances.

d. **Legal Nonconforming Animal Keeping**. Where an existing use involves the keeping of animals, then the number of animals, types of animals, minimum lot area for animals, or other standards for the keeping of animals not in conformance with the zone in which they are located, may be continued until the owner or occupant removes them.

B. **Definitions Applicable to 130.40.080** (Animal Raising and Keeping)**.**

1. **Animal Raising and Keeping.** The keeping, feeding or raising of animals as a commercial agricultural venture, avocation, hobby or school project, including the processing of products or byproducts. This use is allowed either as a primary use or as subordinate and accessory to a compatible residential use.

2. **Animal Husbandry Project.** The raising of farm or game animals such as cattle, horses, goats, sheep, hogs, chickens, rabbits, birds, as a school, 4-H, Grange, or FFA project conducted by students through the twelfth grade and under the direct supervision of a qualified, responsible adult advisor or instructor.

3. **Animals, Large.** Large animals include, but are not limited to, cattle, horses, mules, ostrich, swine, llamas, and/or similar livestock.

4. **Animals, Medium.** Medium animals include, but are not limited to, sheep, goats, emu, alpaca, turkeys, and donkeys.

5. **Animals, Small.** Small animals include, but are not limited to, rabbits, ducks, chickens, fowl, bees, and worms.

6. **Apiaries, Commercial.** Any place where 50 or more colonies or hives of bees are kept. (See Title 6 [Animals], Chapter 6.44 [Apiaries and Beekeeping]) of the County Code of Ordinances.

C. **Animal Keeping in Residential Zones.**

1. **Apiaries, Commercial.** Apiaries are allowed on the following Residential Zones: R2A, R3A, RE-5 and RE-10. Requirements for bee raising and keeping shall meet industry standards as approved by the Agricultural Commissioner and Title 6 (Animals), Chapter 6.44 (Apiaries and Beekeeping) of the County Code of Ordinances. No apiary shall be located within 100 feet of any other property boundary without the written consent of the adjacent resident.

2. **Small animal keeping** is allowed on lots within these Residential Zones: R1, R20K, R1A, R2A, R3A,RE-5 and RE-10 provided that owners adhere to all Operation and Maintenance standards in Subsection E (Operation and Maintenance Standards) and subject to Subsection G (Administrative) below in this Section and the following:

    a. Poultry, fowl, and rabbits must be contained within the boundary of the residential lot and provided a suitable enclosure for nesting, feeding, watering, and roosting.
    b. The keeping of roosters, guinea hens, or pea hens (peacock family) is prohibited on any lot less than 3 acres.

3. **Medium animal keeping** is allowed on lots within these Residential Zones: R1A, R2A, R3A, RE-5 and RE-10 provided that owners adhere to all Operation and Maintenance standards. The keeping of no more than 4 medium animals may be approved by Administrative Permit for lots greater than one half acre, zoned Single-unit Residential (R20K) and all structures or enclosures for use by the animal(s) meet the building setback requirements of the zone.

4. **Large animal keeping** is allowed on lots of more than two acre in size within these Residential Zones: R1A, R2A, R3A, RE-5 and RE-10 provided that owners adhere to all Operation and Maintenance standards. Two or more adjacent lots that are less than two acres in size but managed as a single operation and under same ownership may meet the minimum acreage standard. The keeping of no more than 2 large animals may be approved by Administrative Permit for lots less than two acres when zoned Residential One-acre (R1A) and all structures or enclosures for use by the animal(s) meet the building setback requirements of the zone.

D. **Stables.**

1. **Commercial.** Standards for Commercial Stables can be found in 130.40.210.C (Outdoor Recreational Facilities – Commercial or Public, Commercial Stables), and are defined in Article 8 (Glossary: See "Stables; Commercial") of this Title. The licensing requirements and standards for

commercial Equine Rental Facilities are included in Title 6 (Animals), Chapter 6.24 (Commercial Animal Establishments) of the County Code of Ordinances.

2. **Private.** Private stables, including the breeding and raising of horses, are allowed on residential zoned lots as specified in the zone matrices. Facilities are subject to the following standards:

   a. The facility shall not involve more than three patrons visiting the site at any one time and no more than a maximum of fifteen patrons per day, unless authorized by a use permit as provided in Section 130.40.160 (Home Occupations) below in this Chapter.

   b. The Operation and Maintenance Standards in Subsection E (Operation and Maintenance Standards) below in this Section shall be adhered to.

E. **Operation and Maintenance Standards**

1. **Odor and Vector Control.** Pastures, agricultural accessory structures and animal enclosures, including but not limited to pens, coops, cages, barns, corrals, paddocks and feed areas, shall be maintained free from excessive litter, garbage, and the accumulation of manure, so as to discourage the proliferation of flies, other disease vectors and offensive odors. Sites shall be maintained in a neat and sanitary manner.

2. **Erosion and Sediment Control.** In no case shall any person allow animal keeping to cause soil erosion, or produce sedimentation on any public road, adjacent property, or in any drainage channel. In the event such soil erosion and sedimentation occurs, the keeping of animals outdoors on the site shall be deemed a nuisance and subject to abatement under the County Code of Ordinances.

3. **Noise.** No animals will be allowed to create a public nuisance, disturbing the peace by frequent or continuous noise of an irritating or raucous nature. If a nuisance is deemed to have occurred it may be subject to abatement as specified in Title 6 (Animals) of the County Code of Ordinances.

4. **Specified types of animals allowed.** More than one type of animal may be kept on a single site as allowed for in the use matrix for the applicable zone.

F. **Setbacks.** Animal sheltering structures, including but not limited to coops, stables, and aviaries, shall meet the setbacks established in the applicable zone district in which they occur.

G. **Administrative.** On all lots of less than two acres in size, an Administrative Permit shall be required for:

1. The keeping of large animals allowed pursuant to Subsection C (Animal Keeping in Residential Zones) above in this Section.

2. The keeping of small animals for the purpose of sale, including their products, so long as the animals are maintained in a healthy and sanitary manner that does not violate any section of the State of California Penal Code or Title 6 (Animals) of the County Code of Ordinances.

H. **Penalties.** Violations of this Section may be charged as either an infraction or misdemeanor.

Table 130.40.080.1 – Animal Raising & Keeping Matrix

R1: Single-unit Residential	**P**	**Permissible (allowed) use**
R20K: Single-unit Residential	**A**	**Administrative permit required (130.52.010)**
R1A: One-acre Residential	**MUP**	**Minor use permit required (130.52.020)**
R2A: Two-acre Residential	**CUP**	**Conditional use permit required (130.52.021)**
R3A: Three-acre Residential	**T**	**Temporary use permit required (130.52.060)**
RE: Residential Estates (-5 or -10)	**---**	**Use not allowed in zone**

TYPE	RM	R1	R20K	R1A	R2A	R3A	RE	Reference
Apiaries, Commercial	---	---	---	---	P	P	P	130.40.080.C.1
Small Animals	---	P	P	P	P	P	P	130.40.080.C.2
Medium Animals	---	---	A	P	P	P	P	130.40.080.C.3
Large Animals	---	---	---	A	P	P	P	130.40.080.C.4

130.40.090 *Reserved*

130.40.100 Campgrounds and Recreational Vehicle Parks

A. **Applicability.** The provisions of this Section shall apply to all campgrounds and recreational vehicle parks, as defined in Article 8 (Glossary) of this Title, where the allowed use matrices for the zones allow these uses.

B. **Temporary Camping.** It shall be unlawful to place, maintain, use, or occupy any vehicle or temporary structure, such as a tent, lean-to, or other makeshift enclosure for which no building permit has been issued, on any lot of real property for the purpose of camping, dwelling, maintaining, or establishing a temporary or permanent residency for more than 30 days unless such placement, maintenance, use, or occupancy is authorized in compliance with this Section or with Section 130.52.050 (Temporary Mobile Home Permit) in Article 5 (Planning Permit Processing) of this Title.

C. **Compliance with State Law.** All campgrounds and recreational vehicle parks shall comply with the minimum standards of the Special Occupancy Parks Act (California Health and Safety Code Section 18860, et seq.) and the applicable regulations

adopted by the Department of Housing and Community Development (California Code of Regulations, Title 25: Housing and Community Development Mobile Home Parks and Installations Regulations, Chapter 2) including, but not limited to setback and separation standards, infrastructure requirements, operations, maintenance, and inspections within these facilities.

D. **Development Standards.** The following general standards shall apply to new campgrounds and recreational vehicle (RV) parks or proposed revisions to existing facilities, subject to a Conditional Use Permit in compliance with Section 130.52.021 (Conditional Use Permits) in Article 5 (Planning Permit Processing) of this Title:

1. **Minimum Area and Density.** The minimum area of a campground or RV park shall be three acres. At least 50 percent of the total site shall be left in its natural state or be landscaped. The remaining 50 percent of land is eligible for development. The maximum number of campsites, RV spaces, dormitory rooms, park model units or cabins shall not exceed 9 sites per developable acre and each individual campsite or RV space shall be no less than 1,000 square feet. The average overnight population per campsite, RV space, or cabin shall not exceed four persons.

2. **Fencing.** A fence, wall, landscaping screen, earth mound or other screening approved by the Director, or otherwise required by this Title, shall be required as needed for public safety.

3. **Access.** Campground and recreational vehicle park access roads shall have clear and unobstructed access to a public roadway. There shall be no direct access from an individual campsite, RV space, dormitory room or cabin to a public roadway.

4. **Trash Collection Areas.** Trash collection areas shall be adequately distributed and enclosed by a six foot high landscape screen, solid wall or fence, which is accessible on one side. Bear resistant garbage can containers are required in accordance with Subsection 130.30.030.C.3.g (Bear Resistant Garbage Can Containers) in Article 3 (Site Planning and Project Design Standards) of this Title.

5. **Parking.** The campground and recreational vehicle park shall provide off street parking spaces for each campsite and guest parking in accordance with Chapter 130.35 (Parking and Loading) in Article 3 (Site Planning and Project Design Standards) of this Title.

6. **Signs.** Campground and recreational vehicle park entrance signs shall comply with the provisions under Chapter 130.36 (Signs) in Article 3 (Site Planning and Project Design Standards) of this Title.

7. **Water Supply and Sewage Disposal.** The County Environmental Health Division shall determine that adequate water supply and/or septic capability is available to serve the project.

8. **Commercial Use.** The construction of a structure within the campground or recreational vehicle park that is under the ownership or control of the park and can provide commercial use to the public shall be reviewed by the County for potential impacts on local services under the Conditional Use Permit in compliance with Section 130.52.021 (Conditional Use Permits) in Article 5 (Planning Permit Processing) of this Title.

9. **Length of Stay.** The maximum length of stay in any campground or recreational vehicle park shall not exceed 30 days.

10. **Structures and Recreational Facilities.** The following standards apply to structures on the site, apart from the personal residence of the property owner or caretaker:

    a. Structures are limited to restrooms/showers and one clubhouse which may contain one commercial kitchen facility.

    b. The total area of the structures or portions of structures intended for sleeping that may include restrooms/showers shall be limited to an average of 300 square feet per structure. Structures intended for sleeping may not include any kitchen facilities.

    c. Campgrounds may include minor accessory recreational uses or structures such as swimming pools and tennis courts.

130.40.110 Child Day Care Facilities

A. **Child Day Care Homes.** Child day care homes, as defined in Article 8 (Glossary: See "Child Day Care Home") of this Title, may be provided in any zone that allows detached, single-unit residential dwellings, including rental units, in compliance with California Health and Safety Code Section 1596.70. As such, the following permit requirements shall apply:

1. **Small Family Day Care Homes.** Allowed by right.

2. **Large Family Day Care Homes.** Allowed under an Administrative Permit in compliance with Section 130.52.010 (Administrative Permit, Relief, or Waiver) in Article 5, (Planning Permit Processing) of this Title. The following shall be submitted in addition to the standard permit application requirements:

a. Name and address of the applicant and a statement that he/she resides in the home where the day care will be conducted.

b. A site plan drawn to scale, which may be hand drawn provided it is legible, clearly delineating the location and dimensions of all existing and proposed buildings, structures, walkways, yards, driveways, on-site parking areas, and available parking area along the road frontage.

c. A sign plan, if applicable, demonstrating compliance with Chapter 130.36 (Signs) in Article 3 (Site Planning and Project Design Standards) of this Title for residential signage.

B. **Child Day Care Centers.** Child day care centers, as defined in Article 8 (Glossary: See "Child Day Care Center") of this Title, shall be allowed where allowed in the use matrices for the zones.

C. **Employer-sponsored Child Day Care Centers.** Employer-sponsored child day care centers, as defined in Article 8 (Glossary: See "Employer-sponsored Child Day Care") of this Title, shall be allowed as part of a commercial or industrial building or complex where allowed in the use matrices for the zones.

D. **Permit Process.** When an Administrative Permit is required by this Section it shall be processed as follows:

1. The Director shall, within 45 days of the filing of a complete permit application, approve a child day care facility if the approval standards in Subsection E (Approval Standards) below in this Section, have been met; otherwise, the permit shall be denied.

2. Not less than 10 days prior to the date on which the decision will be made on the application, written notice shall be given to all residentially zoned property owners within a 100-foot radius from the property lines of a proposed large family day care home, child day care center, or employee-sponsored child day care center. The notice shall declare that the application will be acted on without a public hearing if no request for a hearing is made, in compliance with Subsection E.3 (Approval Standards) below in this Section.

3. A hearing will only be held if one is requested in writing by the applicant or other affected person prior to the Director's decision (California Health and Safety Code Section 1597.46.a.3). Hearings will be held before the Zoning Administrator.

4. Decisions that are rendered by the Director may be appealed by the applicant or other affected person. All decisions of the Director are appealable to the Commission and then to the Board, in compliance with Section 130.52.090 (Appeals) in Article 5, (Planning Permit Processing) of this Title.

E. **Approval Standards.** No application for an Administrative Permit shall be approved unless it complies with the development standards of the zone, as specified in Article 3 (Site Planning and Project Design Standards) of this Title, and the following standards:

1. The loading and unloading of vehicle occupants shall only be allowed on the driveway of a residential dwelling, an approved parking area, or along the frontage of the site and shall not restrict traffic flow. Facilities located on those roads delineated in Figure TC-1 of the General Plan or roads designed for speeds of 35 mile per hour or greater shall provide a drop-off and pickup area designed to prevent vehicles from backing into the roadway.

2. The applicant shall comply with all fire and building codes applicable to child day care facilities.

3. The applicant shall obtain a valid state license to operate a child day care facility on the site within 180 days of the date of issuance of an Administrative Permit. Within 14 calendar days after issuance of the state license, the applicant shall provide a copy of the license to the Director. The applicant's failure to obtain a state license or to provide a copy of the license to the Director may result in revocation of the Administrative Permit in accordance with the provisions of Chapter 130.67 (Code Enforcement) in Article 6 (Zoning Ordinance Administration).

4. In addition to the standards in Subsections E.1 and E.2 (Approval Standards) above in this Section, a large family day care home shall be subject to the following:

   a. The site shall provide at least two off-street parking spaces, none of which may be provided in a garage or carport. Parking spaces may include those provided to meet residential parking requirements.

   b. The site shall not be located within 500 feet of any other large family day care home, as measured between the nearest property lines from one another.

   c. If the site has a swimming pool or spa, the pool or spa shall meet all current code regulations for fencing, gate latches, and alarms.

   d. No more than one family day care home shall be located on any single lot.

   e. A permit for a large family day care home is non-transferable.

130.40.120 Commercial Caretaker, Agricultural Employee, and Seasonal Worker Housing

A. **Applicability.** The provisions of this Section shall apply to all housing for commercial caretakers, agricultural employees, and seasonal workers, as defined in Article 8 (Glossary: See "Employee Housing") of this Title, where allowed in the use matrices for the zones.

B. **Commercial Caretaker Housing.**

1. Commercial caretaker housing may be allowed as an accessory use where the primary commercial, industrial, recreational, or civic use involves operations, equipment, or resources that require 24-hour security, and where there is a demonstrated need for such security, including but not limited to the following:

   a. Value and portability of goods and/or equipment stored on the property;

   b. Precautionary measures taken by the applicant to prevent loss or vandalism;

   c. Data from law enforcement agencies demonstrating significant exposure to vandalism or the loss of goods and/or equipment; and

   d. Practicality of permanent facilities.

2. Permanent housing for commercial caretakers may be established where accessory to an existing, allowed commercial, industrial, recreational, or civic use subject to the standards and permit requirements under Subsection E (General Standards) below in this Section.

3. Temporary housing for commercial caretakers shall be subject to a Temporary Mobile Home Permit in compliance with Section 130.52.050 (Temporary Mobile Home Permit) in Article 5 (Planning Permit Processing) of this Title.

4. The Director, in approving a permit for commercial caretaker housing must find that there is a need for such housing based on the information provided under Subsection B.1 (Commercial Caretaker Housing) above in this Section, and that appropriate additional security measures have been installed, such as security lighting and fencing, to minimize potential vandalism or theft.

C. **Agricultural Employee Housing**

1. A residential structure providing accommodation for six or fewer agricultural employees shall be considered a single-unit residential use and shall be allowed by right in any zone that permits single-unit residential uses. (California Health and Safety Code Section 17021.5).

2. Agricultural employee housing consisting of no more than 36 beds in group quarters, or 12 units or spaces designated for use by individual households, shall be allowed as specified in Table 130.21.020 (Agricultural, Rural Lands and Resource Zone Districts Use Matrix) in Article 2 (Zones, Allowed Uses, and Zoning Standards) of this Title, subject to the standards in Subsection E (General Standards) below in this Section. The allowed occupancy in said housing shall allow agricultural employees who do not work on the property where the agricultural employee housing is located (California Health and Safety Code Section 17021.6). Permit approval for agricultural employee housing shall be subject to the following:

   a. The Ag Commission determines the need for such housing exists; and

   b. Agricultural employee housing shall be related to agricultural production, including livestock operations, and may serve agricultural employees who work off-site in serially seasonal, agriculturally-related employment.

D. **Seasonal Worker Housing.** Housing for seasonal workers in the rafting industry, at ski resorts, or for similar recreational uses may be allowed subject to the standards in Subsection E (General Standards) below in this Section. Rental and occupancy of the seasonal worker housing shall only occur during the season in which the workers are needed and shall not be occupied on a full-year basis.

E. **General Standards.** In addition to the specific provisions under Subsections B and D (Commercial Caretaker Housing, and Seasonal Worker Housing, respectively) above in this Section, all commercial caretaker, and seasonal worker housing shall be subject to the following standards under an Administrative Permit in compliance with Section 130.52.010 (Administrative Permit, Relief, or Waiver) in Article 5 (Planning Permit Processing) of this Title. Agricultural employee housing referenced in Subsection C.2 (Agricultural Employee Housing) above in this Section, shall be subject to the following standards under a Minor Use Permit in compliance with Section 130.52.020 (Minor Use Permits) in Article 5 (Planning Permit Processing) of this Title. Housing inconsistent with the standards under this Subsection (General Standards) shall be subject to a Conditional Use Permit in compliance with Section 130.52.021 (Conditional Use Permits) in Article 5 (Planning Permit Processing) of this Title.

1. **Occupancy.** At least one of the occupants of each housing unit shall be a full-time or seasonal employee of the business, operation, or institution that qualifies for such housing in compliance with this Section.

2. **Location of Housing Unit.**

   a. Commercial caretaker housing shall be located on the same lot, or a contiguous lot under common ownership, as the primary use that provides the qualification for such housing, in compliance with the development standards for the zone.

   b. Seasonal worker housing may be located on-site, or off-site if adjacent to the primary use.

   c. Agricultural employee housing may be located on-site or off-site in compliance with Subsection C.2 (Agricultural Employee Housing) above in this Section.

3. **Housing Maintenance.**

   a. All housing, whether permanent or temporary, shall meet the development standards for the zone and be subject to all applicable building, fire, and health codes.

   b. Permanent housing shall be constructed and maintained to conform to State Department of Housing and Community Development regulations for employee housing.

   c. Mobile homes and recreational vehicles used specifically for such housing shall be maintained in compliance with the applicable requirements of the Manufactured Housing Act (California Health and Safety Code Section 18000, et seq.).

   d. Recreational vehicles and temporary structures may be utilized for seasonal worker housing, including agricultural worker housing for six or fewer employees.

F. **Removal of Housing Unit.** A commercial caretaker, agricultural employee, or seasonal worker housing unit shall remain in use concurrent with the existence of the use that justifies the housing unit. Upon termination of the allowed use, the housing unit shall be removed if a temporary structure, or converted to another allowed use if a permanent structure.

130.40.130 Communication Facilities

A. **Applicability.** This Section provides for the orderly development of commercial and private wireless communication facilities including transmission and relay towers, dishes, antennas, and other similar facilities. The Board finds that minimizing the number of communication facilities through co-locations on existing and new towers and siting such facilities in areas where their potential visual impact on the surrounding area is minimized will provide an economic benefit and will protect the public health, safety and welfare.

1. Communication service providers shall:

   a. Employ all reasonable measures to site their antennas on existing structures as facade mounts, roof mounts, or co-location on existing towers prior to applying for new towers or poles;

   b. Work with other service providers and the Department to co-locate where feasible. Where co-location on an existing site is not feasible, develop new sites which are multi-carrier to facilitate future co-location, thereby reducing the number of sites countywide;

2. Generally, the County will seek to minimize the visual impacts of wireless communication facilities by limiting the number of facilities. However, the County may require construction of a number of smaller facilities instead of a single monopole or tower if it finds that multiple smaller facilities are less visually obtrusive or otherwise in the public interest.

B. **Permit Requirements.** Communication Facilities, as defined in Article 8 (Glossary: See "Communication Facilities") of this Title, shall be allowed subject to the following standards and permitting requirements:

1. **Repeaters and Other Small Facilities.** Repeaters and other similar small communication facilities that do not exceed five square feet and do not protrude more than 18 inches from the mounting surface or extend more than three feet above the roofline may be allowed by right in any zone provided that no additional equipment is required.

2. **Building Facade Mounted Antennas.** In all zones, building facade-mounted antennas may be allowed subject to an Administrative Permit in compliance with Section 130.52.010 (Administrative Permit, Relief, or Waiver) in Article 5 (Planning Permit Processing) of this Title subject to the requirements below in this Section. Those facilities not meeting the requirements below are subject to a Conditional Use Permit in compliance with Section 130.52.021 (Conditional Use Permits) in Article 5 (Planning Permit Processing) of this Title.

a. No portion of the antenna, support equipment, or cables shall project above the roofline unless consistent with Subsection 3 (Roof Mounted Antennas) below in this Section;

b. The surface area of all antenna panels shall not exceed 10 percent of the surface area of the facade of the building on which it is mounted or 30 square feet, whichever is greater;

c. No portion of the antenna or equipment shall extend out more than 24 inches from the facade of the building;

d. Antennas and equipment shall be constructed and mounted to blend with the predominant architecture and color of the building, or otherwise appear to be part of the building to which it is attached;

e. The lowest portion of all antennas shall be located a minimum of 15 feet above grade level; and

f. All equipment shelters, cabinets, or other ancillary structures shall be located within the building being utilized for the communication facility, or on the ground screened from public view. Equipment located on the roof must be screened from public view from adjacent streets and properties by an architecturally compatible parapet wall or other similar device.

3. **Roof Mounted Antennas.** The construction or placement of communication facilities as roof mounted antennas may be allowed as follows:

a. In all commercial, industrial and research and development zones, except where located adjacent to a state highway or designated scenic corridor, roof mounted antennas may be allowed subject to approval of an Administrative Permit. Those facilities not meeting the requirements under Subsections B.2.c, B.2.d, and B.2.f (Building Façade Mounted Antennas) above in this Section and the following requirement shall be subject to a Conditional Use Permit in compliance with Section 130.52.021 (Conditional Use Permits) in Article 5 (Planning Permit Processing) of this Title;

(1) Facilities located on the roof of the building shall be located towards the center of the roof if technologically feasible.

(2) The height of the facility shall not exceed 15 feet above the roof top or the maximum height for the zone, whichever is less.

b. In all other zones, or where located adjacent to a state highway or designated scenic corridor, roof mounted antennas shall be subject to Commission approval of a Conditional Use Permit in compliance with

Section 130.52.021 (Conditional Use Permits) in Article 5 (Planning Permit Processing) of this Title.

4. **Co-location on Existing Non-building Structures or Public Facilities.** In all zones, the co-location of antennas on signs, water tanks, utility poles and towers, light standards, and similar structures may be allowed subject to Zoning Administrator approval of a Minor Use Permit in compliance with Section 130.52.020 (Minor Use Permits) in Article 5 (Planning Permit Processing) of this Title. Those facilities not meeting the requirements below are subject to a Conditional Use Permit in compliance with Section 130.52.021 (Conditional Use Permits) in Article 5 (Planning Permit Processing) of this Title:

   a. Antennas shall not exceed the maximum height for the zone or 15 feet above the height of the existing structure, whichever is less;

   b. Antennas and mounting brackets shall be constructed and mounted to blend with the design and color of the existing structure;

   c. All equipment shelters, cabinets, or other ancillary structures shall be located within the structure being utilized for the communication facility, or on the ground screened from public view; and

   d. If proposed to be attached to a structure, utility pole, or tower located within a public utility easement, both the utility and the property owner must authorize submittal of an application for such use.

5. **Co-location on Existing Approved Monopoles or Towers.** In all zones, the placement of antennas on an existing approved monopole or tower may be allowed subject to an Administrative Permit. Those facilities not meeting the requirements below are subject to a Conditional Use Permit in compliance with Section 130.52.021 (Conditional Use Permits) in Article 5 (Planning Permit Processing) of this Title.

   a. New antennas shall be located at or below the topmost existing antenna array, either on the same pole, or at the same height on a replacement pole within the approved lease area;

   b. New antennas shall not extend out horizontally from the pole more than the existing widest projection. Use of designs similar to the existing antenna array is encouraged;

   c. All equipment shelters, cabinets, or other ancillary structures shall be located within the building being utilized for the communication facility, or on the ground screened from public view;

d. The antennas and pole or tower shall be designed to match the existing facility, or to blend with the natural features or vegetation of the site; and

e. Additional antenna arrays added above the existing approved antenna array or that requires the tower height to be increased shall be considered a new tower and shall be subject to the provisions of Subsection B.6 (New Towers or Monopoles) below in this Section.

6. **New Towers or Monopoles**. The construction or placement of communication facilities on new towers or monopoles, or an increase in height of existing towers or monopoles may be allowed as set forth below:

a. In all commercial, industrial, and research and development zones, except where located adjacent to a state highway or designated scenic corridor or within 500 feet of any residential zone, a new tower or monopole may be allowed subject to Zoning Administrator approval of a Minor Use Permit in compliance with Section 130.52.020 (Minor Use Permits) in Article 5 (Planning Permit Processing) of this Title.

b. In all other zones, or where located adjacent to a state highway or designated scenic corridor or within 500 feet of any residential zone, new towers or monopoles shall be subject to Commission approval of a Conditional Use Permit in compliance with Section 130.52.021 (Conditional Use Permits) in Article 5 (Planning Permit Processing) of this Title.

7. **Other Types of Facilities Not Listed Above.** Application proposals that do not conform to the above requirements of Subsections B.2 through B.5 above in this Section will be subject to Commission approval of a Conditional Use Permit in compliance with Section 130.52.021 (Conditional Use Permits) in Article 5 (Planning Permit Processing) of this Title, as determined by the Director.

8. **Speculative Towers.** Towers for which no licensed communication carriers have committed to utilize shall be prohibited.

C. **Visual.** Visual simulations of the wireless communications facility, including all support facilities, shall be submitted. A visual simulation can consist of either a physical mockup of the facility, balloon simulation, computer simulation, or other means.

D. **Development Standards.** All facilities shall be conditioned, where applicable, to meet the criteria below:

1. **Screening.** All facilities shall be screened with vegetation or landscaping. Where screening with vegetation is not feasible, the facilities shall be disguised to blend with the surrounding area. The facility shall be painted or constructed with stealth technology to blend with the prevalent architecture, natural features, or vegetation of the site.

2. **Setbacks.** Compliance with the applicable zone setbacks is required. Setback waivers shall be considered to allow flexibility in siting the facility in a location that best reduces the visual impact on the surrounding area and roads, subject to Zoning Administrator approval of a Minor Use Permit in compliance with Section 130.52.020 (Minor Use Permits) in Article 5 (Planning Permit Processing) of this Title.

3. **Maintenance.** All improvements associated with the communication facility, such as equipment shelters, towers, antennas, fencing, and landscaping shall be properly maintained at all times. Design, color, and textural requirements under the approved conditions shall be maintained to ensure a consistent appearance over time.

E. **RF Requirements.** The application for a discretionary permit shall contain a report or summary of the estimates of the non-ionizing radiation generated by the facility. The report shall include estimates of the maximum electric and magnetic field strengths in all directions from the facility to the property lines of the facility site.

F. **Availability.** All existing communication facilities shall be available to other carriers as long as structural or technological obstacles do not exist.

G. **Unused Facilities.** All obsolete or unused communication facilities shall be removed within six months after the use of that facility has ceased or the facility has been abandoned. The applicant shall notify the Department at the time of abandonment. All site disturbance related to the facility shall be restored to its pre-project condition.

H. **Permit Application Requirements.** In order to protect the visual character of established neighborhoods and to protect school children from safety hazards that may result from a potentially attractive nuisance, in addition to the noticing requirements of Article 5, the following notification shall occur:

1. **School District Notification.** If the proposed wireless facility is located within 1,000 feet of a school, the appropriate school district shall be notified during the initial consultation.

2. **Homeowners Association Notification.** For facilities proposed to be located on residentially-zoned land, the applicant shall identify any homeowners association which might govern the property and homeowners associations that are adjacent to the property. Any that are identified shall be notified during the initial consultation.

130.40.140 *Reserved*

130.40.150 Guest House

A. **Applicability.** A guest house attached to or detached from the primary dwelling may be established as an accessory use in any zone allowing single-unit residential development, subject to the general development requirements in Subsection B (General Development Requirements) below in this Section.

B. **General Development Requirements.** A guest house shall conform to the setbacks, height limits, lot coverage, and other requirements of the zone in which it is located, as well as the following:

1. **Floor Area Limitation.** The maximum floor area allowed for a guest house is 600 square feet. Floor area shall be measured from the outside of the exterior guest house walls including all enclosed habitable or potentially habitable space.

2. **Limitation on Use.** As defined under Article 8 (Glossary: See "Guest House") of this Title, a guest house:

   a. May contain a living area, a maximum of two bedrooms, and one bathroom. The living area may include a wet bar, as defined in Article 8 (Glossary) of this Title. A laundry facility and kitchen or cooking facility, or room for installation of a stove, full size refrigerator, or sink other than the bathroom and wet bar sinks, shall be prohibited;

   b. Shall be used for temporary, non-commercial sleeping quarters by visitors of the property owner/lessor; and

   c. Shall not be provided an electric meter separate from the primary dwelling.

130.40.160 Home Occupations

A. **Contents.** This Section provides opportunities for home-based businesses compatible with surrounding residential and agricultural uses in order to encourage home workplace alternatives, promote economic self-sufficiency of county residents, reduce commuting on U.S. Highway 50, while minimizing conflicts with adjacent property owners, maintaining the residential character of neighborhoods, and protecting the public health, safety, and welfare.

B. **Applicability.** A home occupation, as defined in Article 8 (Glossary: see "Home Occupation") of this Title, shall be allowed in any zone that allows single- or multi-unit residential use in compliance with the standards and permitting requirements of

this Section as shown in Table 130.40.160.1 (Home Occupation Use Matrix) below in this Section.

Table 130.40.160.1 – Home Occupation Use Matrix

	RM	R1	R20K	R1A/R2A	R3A	RE	Rural Lands, Agricultural and Resource Zones
Home Occupations (including Student Instruction) in compliance with standards in 130.40.160.C.	P	P	P	P	P	P	P
Student Instruction exceeding standards in 130.40.160. C but in compliance with standards of 130.40.160 D.	A	A	A	A	A	A	A
Home Occupations or Student Instructions not in compliance with standards in 130.40.160 C or D.	CUP	CUP	CUP	CUP	CUP	CUP	CUP

C. **Standards.** A home occupation shall be allowed in compliance with the following standards and Title 5 (Business Taxes, Licenses and Regulations) in the County Code of Ordinances:

1. All business is conducted within permitted structures on the lot or outdoors provided the business is screened from a right-of-way or road easement. The appearance of the structure shall not be altered nor shall the occupation be conducted in a manner that would cause the structure to differ from its residential character either by the use of colors, materials, construction, lighting, or signs, except where required under Subsection C.5 below in this Section.

2. For home occupations conducted in any part of a garage or a detached building, the activity shall not be visible from a right-of-way or road easement, nor shall it require vehicles of the property owner to be routinely parked on the street.

3. The business shall be owned and operated by a person or persons residing on the premises. The business owner may have on-site meetings with other business personnel who provide support service to the home occupation, such as accountants and transcribers. Full or part-time employees under the direct payroll and supervision of the business owner, or an independent contractor

shall be allowed to work at the site of the home occupation subject to Subsection C.5 below in this Section, and as shown in Table 130.40.160.2 (Home Occupation Employee Limits) below:

Table 130.40.160.2 – Home Occupation Employee Limits

	RM	R1	R20K	R1A/ R2A	R3A	RE	Rural Lands, Agricultural and Resource Zones
<1 acres	1	1	1	1	1	1	1
1-5 acres	1	1	2	2	2	2	2
> 5 but less than 10 acres	1	1	2	2	2	2	2
> 10 acres	1	1	2	2	2	2	2

4. Retail sales may occur on the premises by appointment, only, or when conducted by telephone, mail, or internet, with delivery occurring off-site.

5. A change of use for that portion of a structure utilized as an office, workroom, sales area, or restroom facilities for employees or commercial customers may require a building permit.

6. As part of the home occupation, no equipment or process shall be used that creates noise, vibration, dust, glare, fumes, odors, or electrical interference detectable to the normal senses off-site. In the case of electrical interference, no equipment or process shall be used that creates visual or audible interference in any radio or television receivers, or that causes fluctuations in line voltage off-site. Businesses that do not meet these standards may be subject to a Conditional Use Permit in compliance with Section 130.52.021 (Conditional Use Permits) in Article 5 (Planning Permit Processing) of this Title.

7. Commercial delivery vehicles that are normally associated with residential uses may be utilized for the pick up or delivery of materials related to the home occupation.

8. Heavy Commercial Vehicles, as defined in Article 8 (Glossary: See "Vehicle, Heavy Commercial") of this Title are allowed as follows:

   a. Agricultural, Rural Lands (RL), and Resource zones (See Chapter 130.21: Agricultural, Rural, and Resources Zones) in Article 2 (Zones, Allowed Uses, and Zoning Standards), may be stored on-site.

   b. On lots five acres or larger and in Residential Estate (RE) may be stored on-site providing they are not visible from a right-of-way or road easement, except when in use.

c. On lots larger than or equal to one acre but less than five acres and are zoned R2A or R3A, commercial vehicles are allowed provided that the vehicle is stored or parked on-site within an enclosed structure or screened from public view when not in use.

d. On lots less than one acre or lots zoned RM, R1, R20K and R1A, no heavy commercial vehicles used as part of the home occupation shall be stored or parked on-site or on the road frontage.

9. Goods or materials used or manufactured as part of the home occupation shall not be visible from a right of way or road easement.

10. Any materials used or manufactured as part of the home occupation may be subject to the review and approval of Environmental Management and the applicable fire department prior to business license sign off by the Department.

11. The total acreage of contiguous lots under same ownership shall be used to determine the number of employees, customers and clients allowed for a home occupation.

12. Student instruction shall be provided by appointment only, subject to the following standards:

a. Group lessons shall be limited to a maximum of six students per group lesson at any one time, once per day, on parcels less than one acre, or twice per day on parcels one acre or greater, provided adequate parking is available. Parking space that meets on-site residential requirements, as well as available parking space along the road frontage may be used.

b. No concerts, recitals, performance events, or showings shall be held on the site unless in compliance with Subsection D (Student Instruction - Administrative Permit Required) below in this Section.

c. Student instruction shall be allowed between the hours of 7:00 a.m. and 9:00 p.m.

13. The following home occupations shall be allowed by right in Agricultural, Rural Lands and Resource zones, and Residential Estate (RE) zones (See Chapters 130.21: Agricultural, Rural, and Resources Zones, and 130.24: Residential Zones) in Article 2 (Zones, Allowed Uses, and Zoning Standards) of this Title, on lots with a minimum size of 10 acres, in compliance with the standards under Subsection C.12 (Standards) above in this Section:

a. Horseback riding lessons or similar instruction involving animal husbandry.

b. Horse boarding providing the use or training of the horse(s) is limited to their owners or lessees.

D. **Student Instruction - Administrative Permit Required.** An Administrative Permit shall be required when a home occupation exceeds the standards under Subsections C.12 or C.13 (Standards) above in this Section. An Administrative Permit for a home occupation under this Subsection shall only be approved when the Director finds that the standards being exceeded will not change the residential character of the neighborhood based on the attendance numbers, frequency or duration of the event, and nature of the use. If applicable, the location of an accessory structure relative to adjacent residential uses shall be considered, as well. In addition to all other standards under Subsection C (Standards) above in this Section, permit approval shall be subject to compliance with the following standards:

1. The site of the home occupation either has direct access to a public or private road that conforms to Standard Plan 101C, or the property owner participates in a road maintenance association.

2. The total number of vehicle round trips to the site generated by students receiving group lessons shall not exceed 12 per day.

3. There shall be adequate parking on the site to accommodate recitals or concerts, in addition to the required residential parking spaces. Added parking areas shall be located outside of any setback areas for the zone, in compliance with Chapter 130.35 (Parking and Loading) in Article 3 (Site Planning and Project Design Standards) of this Title. Available parking along the road frontage may also be used.

4. A proposed accessory structure for the purpose of conducting recitals or concerts shall be allowed as follows:

a. For lots less than one acre, one structure of 600 square feet, maximum.

b. For lots one acre or larger, one structure of 1,600 square feet, maximum.

E. **Signs**. Signs identifying authorized home business activities on the site shall be subject to the standards in Table 130.36.070.3 (Sign Standards for Home Occupation Signs) in Chapter 130.36 (Signs) in Article 3 (Site Planning and Project Design Standards) of this Title. All signs shall be compatible in design with the residential structures on-site and shall not be illuminated.

F. **Limitations on Home Occupations.** The following uses occurring on the site are not compatible with residential activities on parcels less than 1 acre, and shall not be allowed as home occupations. For parcels one acre or greater, the following uses occurring on the site as indicated below are subject to a Use Permit as specified in Table 130.40.160.1 (Home Occupation Use Matrix) above in this Section:

1. Motor vehicle and other vehicle repair or maintenance (body or mechanical) including, but not limited to the repair of engine, muffler, or drive train components of the vehicle; and upholstering, painting, or detailing work, except as provided in Section 130.40.380 (Vehicle Maintenance, Repair, and Storage Accessory to a Residential Use) below in this Chapter.

2. Storage of motor vehicles, including but not limited to automobiles, motorcycles, heavy commercial vehicles, recreational vehicles, trailers, and boats (motorized or not), except as provided in Section 130.40.380 (Vehicle Maintenance, Repair, and Storage Accessory to a Residential Use) below in this Chapter.

3. Carpentry and cabinet making, with the exception of woodworking that results in the creation of small wood products or single orders of furniture where delivery occurs off-site or on-site by appointment only.

4. Food preparation and food sales, except as part of a catering business where prepared food will be delivered off-site, subject to Environmental Health permit requirements.

5. Commercial kennels or catteries.

6. Personal services, as defined in Article 8 (Glossary: See "Services, Personal") of this Title.

7. Medical and dental offices, clinics, and medical laboratories.

8. Veterinary services, with the exception of those considered an 'agricultural support service', as defined in Article 8 (Glossary) of this Title and subject to the standards in Section 130.40.070 (Agricultural Support Services) above in this Chapter.

9. Repair shops or service establishments, with the exception of repairing small electrical appliances, cameras, or other similar items where pick-up and delivery occurs off-site or on-site by appointment only.

10. Commercial stables, as defined in Article 8 (Glossary: See "Stables: Commercial") of this Title, which shall be subject to Subsection 130.40.210.C (Outdoor Recreation Facilities) below in this Chapter.

11. Large-scale upholstering service, with the exception of upholstering single orders of furniture or other objects where pick-up and delivery occurs off-site.

12. Welding and machining, except when incidental to small scale production or parts assembly; or work or craft that is the activity of creative artists.

G. **Conditional Use Permit.** Where a proposed home occupation exceeds the standards under Subsections C.1 through C.11 (Standards), or Subsection D (Student Instruction - Administrative Permit Required) above in this Section, a Conditional Use Permit shall be required in compliance with Section 130.52.021 (Conditional Use Permits) in Article 5 (Planning Permit Processing) of this Title.

130.40.170 Lodging Facilities

A. **Applicability.** This Section applies to lodging facilities, as defined in Article 8 (Glossary) of this Title, that are located outside of commercial zones where allowed under the use matrices for the zones. This Section does not apply to Vacation Home Rentals (see Chapter 5.56: Vacation Home Rentals in Title 5 – Business Taxes, Licenses and Regulations).

B. **General Standards.** Lodging facilities shall be subject to the general standards below in this Section. In addition, the specific use standards under Subsections C-E (Agricultural Lodging, Bed and Breakfast Inns, Health Resort and Retreat Center, respectively) below in this Section shall apply.

1. Lodging facilities proposed within Agricultural Districts, as identified on the General Plan land use maps, on or adjacent to land zoned Planned Agriculture (PA), Limited Agriculture (LA), Agricultural Grazing (AG), Forest Resource (FR), or Timber Production (TPZ) must be reviewed by the Ag Commission for compatibility with surrounding agricultural land uses or on agriculturally zoned lands prior to action by the review authority.

2. The applicant must demonstrate to the satisfaction of the Environmental Management Department that the facilities meet all applicable health standards including, but not limited to, kitchen facility, water, and sewage disposal permit requirements.

3. Unless superseded by the regulations under this Section, guest accommodations shall be allowed in compliance with the development standards of the respective zone and Article 3 (Site Planning and Project Design Standards) in this Title.

4. Signs: See Chapter 130.36 (Signs) in Article 3 (Site Planning and Project Design Standards) in this Title.

5. Lodging facilities shall have direct access to a maintained road in conformance with Department of Transportation standards. The entrance, parking area, and walkways shall be kept free of obstructions or hazards of any type. With the exception of Agricultural Homestays, Guest Ranches, and Agricultural and Timber Resource Lodging, the entrance, parking and walkways shall be illuminated in compliance with Chapter 130.34 (Outdoor Lighting) in Article 3 (Site Planning and Project Design Standards) in this Title.

6. Lodging facilities shall provide off street parking at a ratio of one space per each guest room, plus two spaces required for the primary dwelling. Guest parking shall be subject to the following:

    a. No guest parking shall be allowed within the required front or side yard setback.

    b. Tandem parking, meaning two cars parked one behind the other, may be allowed. Denser parking lot configurations may be allowed if valet parking is provided.

    c. Guest parking shall be designed to prohibit the backing of vehicles directly into any public right of way in order to exit any parking space.

    d. The parking area provided for a lodging facility may have a gravel surface.

7. A lodging facility consisting of five or fewer guestrooms shall be considered a single-unit residential dwelling or lodging house for the purpose of building codes, unless additional standards are required by said codes, as amended from time to time and adopted by the County. Six or more guestrooms within one structure shall be subject to further requirements under the building codes.

8. The operation of a lodging facility shall be subject to Title 3 (Revenue and Finance), Chapter 3.28 (Transient Occupancy Tax) and Title 5 (Business Taxes, Licenses and Regulations), Chapter 5.08 (License Requirements and Procedure) of the County Code of Ordinances. The business license shall be posted in a conspicuous place on the premises prior to operation of the business.

9. Ancillary activities such as weddings, receptions, fund raisers, or similar events attended by non-guests may be allowed as part of a Conditional Use Permit (Section 130.52.021: Conditional Use Permits) or subject to a Temporary Use Permit (Section 130.52.060: Temporary Use Permit) in Article 5 (Planning Permit Processing) of this Title, if applicable.

10. If not already required under the allowed use matrix, a Conditional Use Permit shall be required, in compliance with Section 130.52.021 (Conditional Use Permits) in Article 5 (Planning Permit Processing) of this Title, when a proposed use exceeds the general standards in this Subsection.

C. **Agricultural Lodging** Table 130.40.170.1 (Agricultural Lodging) below identifies the allowed agricultural lodging facilities subject to the provision below.

Table 130.40.170.1: Agricultural Lodging

LA: Limited Agricultural **PA: Planned Agricultural** **AG: Agricultural Grazing** **RL: Rural Lands** **FR: Forest Resource** **TPZ: Timber Production Zone**	**P Permissible (allowed) use** **A Administrative permit required (130.52.010)** **T Temporary use permit required (130.52.060)** **CUP Conditional use permit required (130.52.021)** **MUP Minor use permit required (130.52.020)** **--- Use not allowed in Zone**						
USE TYPE	LA	PA	AG	RL	FR	TPZ	Reference
Agricultural Lodging							
Agricultural homestays	A	P	P	A	A	CUP	
Agricultural & timber lodging	MUP	A	P	MUP	A	CUP	
Guest Ranch							
160 or more acres	CUP	CUP	P[1]	CUP	CUP	CUP	
40 up to 160 acres	CUP	CUP	A[1]	CUP	CUP	CUP	
Less than 40 acres	CUP	CUP	MUP[1]	CUP	CUP	CUP	
Note: Agriculturally based lodging is an accessory and subordinate use to an agricultural operation, confirmed by the Agricultural Commissioner.							

1. **Agricultural Homestays.**

   a. The applicant shall demonstrate to the satisfaction of the Agricultural Department that the site meets the minimum qualifications for agricultural or grazing use as set forth under the minimum criteria for a Williamson Act Contract, whether the property is under Contract or not. The adopted Williamson Act criteria for lots between 10 and 20 acres shall also apply on similarly sized lots, whether they are under Contract or not.

   b. The use is limited to a maximum of three guest rooms for up to six guests at any one time.

   c. The property owner shall reside in either the primary or secondary dwelling on-site.

   d. Meals may be served to overnight guests, only. There are no limitations on the number of meals or the times at which they are served. The price of food shall be included in the price of the overnight accommodations in compliance with the California Retail Food Codes enforced by the County (California Health and Safety Code Section 113893).

   e. Uses which do not meet the above criteria may be considered as a Bed and Breakfast Inns under Subsection D (Bed and Breakfast Inns), below in this Section.

2. **Agricultural and Timber Resource Lodging.**

   a. Minimum lot size – 10 acres.

   b. The applicant shall demonstrate to the satisfaction of the Agricultural Department that the site meets the minimum qualifications for agricultural or grazing use as set forth under the minimum criteria for a Williamson Act Contract, whether the property is under contract or not.

   c. Lodging in TPZ shall be subject to Subsection 130.40.350.G (Required Findings to Support Residential, Recreational and Other Non-Timber Uses) below in this Chapter.

3. **Guest Ranch.**

   a. The applicant shall demonstrate to the satisfaction of the Agricultural Department that the site meets the minimum qualifications for agricultural/grazing use as set forth under the minimum criteria for a Williamson Act Contract, whether the property is under contract or not.

   b. Meals may be served to registered day use or overnight guests, only. There are no limitations on the number of meals or the times at which they are served.

D. **Bed and Breakfast Inns *(Adopted 4/29/08)***

1. Bed and breakfast inns shall be considered an expanded home occupation in residential and agricultural zones and a compatible use in commercial zones.

2. The bed and breakfast inn may provide up to a maximum of 20 guestrooms, which shall be contained within the primary and secondary dwelling units and guest house only, in compliance with the development standards of the applicable residential or agricultural zones.

3. The property owner shall reside in either the primary or secondary dwelling on-site.

4. Meal service shall be limited to registered guests and shall consist of breakfast and light snacks as a portion of the overall room rate in compliance with the California Retail Food Codes enforced by the County (California Health and Safety Code Section 113893).

5. The Conditional Use Permit may authorize limited ancillary activities such as weddings, receptions, fund raisers, or similar events attended by non-guests, subject to conditions of approval that include, but are not limited to, restrictions upon the frequency and time of holding events, duration thereof, and the maximum number of persons attending. Food preparation, except for the aforementioned breakfast and light snacks, shall not be allowed within the bed and breakfast inn. Unless expressly authorized in the Conditional Use Permit, such ancillary activities are prohibited.

   A Temporary Use Permit for an ancillary activity may be processed in situations where special events are not authorized under the Conditional Use Permit for the bed and breakfast inn, in compliance with Section 130.52.060 (Temporary Use Permit) in Article 5 (Planning Permit Processing) of this Title. Applicable conditions shall be imposed, as determined necessary by the review authority, which restrict the number of people attending and offset other related impacts, in order to maintain the residential character of the surrounding neighborhood.

6. New construction proposed on a bed and breakfast inn site, including buildings not necessarily proposed for bed and breakfast inn use, or exterior remodeling of the building(s) to be used for guest accommodations, is subject to architectural review by the review authority as part of the Conditional Use Permit process, in compliance with Section 130.52.021 (Conditional Use Permits) in Article 5 (Planning Permit Processing) of this Title. This determination will be based on building materials, compatibility with neighborhood building style, and any historic style indigenous to the area.

E. **Health Resort and Retreat Center.**

1. Health resorts and retreat centers shall be considered an expanded home occupation in residential zones and may be a compatible use in Agricultural, Rural Lands and Resource Zones, Commercial and Special Purpose zones.

2. Prior to action by the review authority, lots adjacent to or within Agricultural zoning must be reviewed by the Ag Commission for compatibility with surrounding agricultural uses prior to action by the review authority.

3. Meals may be served to registered day use or overnight guests, only. There are no limitations on the number of meals or the times at which they are served.

4. The Health Resort and Retreat Center may provide up to a maximum 20 guestrooms within one or more structures, in compliance with the development standards of the applicable residential or agricultural zones.

130.40.180 Mixed Use Development

A. **Applicability.** Residential development may occur with the commercial development allowed in Chapter 130.22 (Commercial Zones) in Article 2 (Zones, Allowed Uses, and Zoning Standards) of this Title under the use matrices for the zones. Commercial development may occur with residential development allowed in Chapter 130.24 (Residential Zones) in Article 2 (Zones, Allowed Uses, and Zoning Standards) of this Title.

B. **General Requirements.** The following requirements shall apply to all mixed use development projects:

1. Commercial and residential uses shall be complementary and mutually supportive of each other and shall be integrated into the community or neighborhood where the development is located.

2. The residential component shall be allowed on separate lots within the development.

3. The residential component may include a full range of single-unit and/or multi-unit residential design concepts.

4. On commercially zoned land, the residential component shall be constructed concurrently with or following construction of the commercial component of the project site. On RM zoned land, timing provisions shall not apply.

5. Mixed use development projects may be phased.

6. Mixed use development may include live/work units. A live/work unit is defined as a single unit consisting of both a commercial/office and a residence that is occupied by the same resident. The live/work unit shall be the primary dwelling of the occupant.

7. Mixed use development projects in Community Regions shall require one of the following planning permits:

    a. Projects designed consistent with the Mixed Use Design Manual, adopted by the Board on December 15, 2015 and reformatted on April 24, 2018 (Resolution 197-2015) shall require a Design Review Permit consistent with Section 130.52.030 (Design Review Permit) in Article 5 (Planning Permit Processing) of this Title.
    b. All other mixed use projects shall require a Development Plan Permit consistent with Section 130.52.040 (Development Plan Permit) in Article 5 (Planning Permit Processing) of this Title.

8. Mixed use development projects in Rural Centers or the Rural Region shall be encouraged to comply with the standards and guidelines found in the adopted Mixed Use Design Manual.

C. **Development Standards.**

1. At least 30 percent of the gross floor area of the mixed use development project shall be devoted to commercial uses. "Gross floor area" as used within this Section does not include inner courtyards and exterior stairwells or balconies.

2. The maximum density for the residential use component shall be 20 dwelling units per acre in Community Regions and 10 dwelling units per acre in Rural Centers or developments without a public sewer connection.

3. Minimum residential dwelling unit area shall comply with the building code.

4. The gross floor area of commercial use in a mixed use development on RM zoned land shall not exceed 15 percent of the gross floor area of the project.

5. Setbacks: Notwithstanding Sections 130.22.030 (Commercial Zone Development Standards) and 130.24.030 (Residential Zone Development Standards) in Article 2 (Zones, Allowed Uses, and Zoning Standards) of this Title, front setbacks for mixed use development projects shall be as follows:

Table 130.40.180.1 – Front Setbacks for Mixed Use Development

Street Classification	**Minimum (in feet)**	**Maximum (in feet)**
Major 2-lane Road – Community Region	0	10
Major 2-lane Road – Rural Center and Rural Region	0	5
Local Road	0	5

Mixed use buildings shall have no minimum side and rear setbacks if the building has a fireproof wall with no openings that meets all building and fire code requirements. Otherwise, side and rear setbacks shall be a minimum of five feet.

6. Parking shall be subject to the requirements in Chapter 130.35 (Parking and Loading) and Chapter 130.33 (Landscaping Standards) in Article 3 (Site Planning and Project Design Standards) of this Title. Notwithstanding the requirements of Chapter 130.35 (Parking and Loading), parking shall be required as follows:

Table 130.40.180.2 – Parking Requirements

Use type	Minimum standard
Accessory dwelling unit	none
Commercial use	1 space/400 square feet 3 bicycle parking spaces per 2,000 square feet of building space
Civic use	1 space/400 square feet
Industrial use (limited to commercial zone provisions)	1 space/500 square feet 3 bicycle parking spaces per 2,000 square feet of building space
Residential use	1 space/dwelling unit
Live/work	1 space/dwelling unit, plus the lesser of 1 space/400 SF or 1 space for each non-resident employee

a. On-street parking spaces located within 400 feet of the project may be credited to meet up to 50 percent of the minimum required off-street parking spaces. On-street parking allowed by this provision shall not be counted toward the maximum amount of parking allowed.

b. The Director may reduce the minimum off street parking requirements by up to 100 percent for mixed-use projects meeting at least one of the following requirements:

i. The project is sited within one-quarter mile of a public or private parking lot that can accommodate the off-street requirements.

ii. The project developer or owner contributes into a "public parking lot development fund" based upon the number of required off-street parking spaces.

7. On-site pedestrian walkways or sidewalks connecting the residential and commercial components, as well as connecting to adjacent commercial, residential, and civic uses, shall be provided for pedestrian safety.

D. **Findings.** To assure the proposed development meets the intent of this Section for mixed use development the following findings shall be made prior to approving a mixed use project:

1. The development contains complementary and connected uses that are mutually supportive of each use, provides a significant functional interrelationship, and are integrated into the community or neighborhood it is located.

2. The development creates an appropriate internal and external human scale, and provides for pedestrian comfort and amenities.

3. The development is an integrated project as to land use, building design, and site layout, with a coherent physical design.

130.40.190 Mobile/Manufactured Homes

A. **Applicability.** A mobile or manufactured home (hereinafter referred to as "mobile home") or a recreational vehicle (RV) may be allowed for temporary or permanent use in compliance with the provisions of Chapter 110.64 (Mobile Home Regulations) of Title 110 (Buildings and Construction) of the County Code of Ordinances, the development standards of the zone, and the provisions of this Section.

B. **Permit Requirements.**

1. **Residential Dwellings.** In all zones which permit detached, single-unit residential dwellings by right, the permanent placement of mobile homes as primary and/or secondary dwellings shall be allowed by right.

2. **Temporary While Constructing.** One mobile home or recreational vehicle may be placed on a lot for the purpose of habitation during the construction of a permitted primary dwelling or during major repair of a damaged dwelling that is uninhabitable. A temporary occupancy permit shall be obtained from Building Services for the mobile home or recreational vehicle, and an active building permit must remain in effect for the primary dwelling.

3. **Hardship Purposes.** One temporary mobile home may be allowed on a lot measuring one acre or larger, in compliance with permit requirements under Section 130.52.050 (Temporary Mobile Home Permit) in Article 5 (Planning Permit Processing) of this Title only when there is an existing primary dwelling and the temporary mobile home is for the following uses:

   a. To provide temporary housing or shelter for the owner or members of the household and/or to allow for in-home care of household members who reside on the lot.

   b. To provide caretaker assistance to the elderly or disabled homeowner(s) in their personal care and/or protection of their property. The elderly or disabled homeowner(s) must reside in the primary or secondary dwelling. Under this Section, "elderly" shall mean a person 62 years of age or older.

4. **Contractor's Office.** One or more mobile home(s) may be used exclusively as a temporary office for contractors engaged in construction projects during the course of construction of the project where an active building, grading, or other permit remains in effect, subject to the following provisions:

   a. A temporary contractor's office may be located on the same property as the construction project subject to approval of an Administrative Permit in compliance with Section 130.52.010 (Administrative Permit, Relief, or Waiver) in Article 5 (Planning Permit Processing) of this Title.

   b. A temporary contractor's office may be located off-site subject to approval of a Temporary Use Permit in compliance with Section 130.52.060 (Temporary Use Permit) in Article 5 (Planning Permit Processing) of this Title.

   c. A temporary contractor's office located on or adjacent to agricultural or resource zoned land shall be subject to review by the Agricultural Commissioner.

5. **Construction Employee Housing.** The temporary placement of one or more mobile homes or recreational vehicles to provide construction-related employee housing may be allowed subject to the use matrices for the zones. Such temporary housing shall be limited to projects in remote areas where permanent housing is infeasible and where a mobile home park, recreational vehicle park, or campground space are unavailable. A temporary occupancy permit shall be obtained from Building Services for the mobile home(s) or recreational vehicle(s), and an active building permit must remain in effect for the construction project.

6. **Agricultural Employee Housing.** One or more mobile homes may be used for housing agricultural employees and their immediate families in compliance with the requirements under Section 130.40.120 (Commercial Caretaker, Agricultural Employee, and Seasonal Worker Housing) above in this Chapter.

7. **Caretaker Housing.** On lots that contain commercial, industrial, recreational, or civic uses including public and private schools and churches, one mobile home may be placed on the lot or contiguous lots under common ownership for the purpose of providing housing for a caretaker in compliance with the requirements of Section 130.40.120 (Commercial Caretaker, Agricultural Employee, and Seasonal Worker Housing) above in this Chapter.

C. **Temporary Mobile Home Removal.** Where the permit has expired in compliance with Subsection 130.52.050.E (Permit Expiration) in Article 5 (Planning Permit Processing) of this Title, the mobile home or recreational vehicle shall be removed

from the property within 30 days following the date of expiration. The applicant shall be required to obtain a demolition permit in order that the County can verify that water, sewer or septic systems, and other utilities are disconnected and the unit is removed from the site.

130.40.200 ***Reserved***

130.40.210 Outdoor Recreational Facilities – Commercial or Public

A. **Applicability.** Commercial or public outdoor recreational facilities are subject to the provisions of this Section where allowed under the use matrices for the zones. The standards under this Section do not apply to private recreational facilities such as swimming pools or tennis courts, that are accessory to an individual residence, a planned community or a multi-unit residential complex and not open to the public, or that are accessory to a school.

B. **Permit Requirements.** Where allowed under the use matrices for the zones, those commercial or public outdoor recreational facilities allowed by right shall be subject to the building permit process, while those subject to Administrative or Conditional Use Permit approval shall be reviewed for impacts to the surrounding area. In addition, the specific use standards under Subsections D-G (Hunting/Fishing Club, or Farm; Off -highway or Off-road Vehicle area; Parks, Day Use; Swimming Pools and Tennis Courts, respectively) below in this Section shall apply.

C. **Commercial Stables.** Stables that provide horses for hire at an hourly, daily or weekly rate, commercial boarding and training of horses, or riding lessons that exceed the standards of a home occupation shall be subject to the following minimum standards:

1. **Minimum Lot Size.** 10 acres.

2. **Setbacks.** Under this Subsection, commercial stables, barns, and other structures used for or intended to be used for the sheltering of horses and/or other animals shall comply with the setback requirements of the zone in which they are located, except that the minimum setback from any residentially-zoned property shall be 100 feet.

3. **Parking and Loading.** Horse trailer parking spaces required under Chapter 130.35 (Parking and Loading) in Article 3 (Site Planning and Project Design Standards) of this Title shall be located a minimum of 50 feet from any public road or right-of-way.

4. **Arenas.** Training arenas shall have a minimum setback of 100 feet from any residentially-zoned property. Arenas used for shows or events where more than 10 people could congregate at any one time shall be subject to a

Conditional Use Permit in compliance with Section 130.52.021 (Conditional Use Permits) in Article 5 (Planning Permit Processing) of this Title.

5. **Equestrian Trails.** Prior to Department approval of a permit for a commercial stable where the public may be riding off of the premises, the applicant shall demonstrate access to a trail easement for equestrian purposes. Proposed commercial stables adjacent to trail easements may be required to dedicate land for trail access points, as determined by the Director.

   a. If horses will be traveling on a roadway, written approval shall be submitted from the following:
      (1) **Private road:** Any road maintenance association or other entity created for road maintenance. The operator of the stable shall provide sufficient written documentation to provide proof of the right to use the private road for the proposed use.
      (2) **County road:** Department of Transportation.
      (3) **State highway:** Caltrans and the California Highway Patrol.

D. **Hunting/Fishing Club, or Farm**

1. **Minimum Lot Size** – 20 acres.

2. **Lodging Facilities Accessory.** Where applicable, lodging facilities accessory to this use shall be consistent with the standards under Subsection 130.40.170.B (Lodging Facilities: General Standards) above in this Chapter.

E. **Off-highway or Off-road Vehicle area.** Uses within this Subsection shall include but not be limited to go-cart, motocross, all-terrain vehicle, snowmobile, and miniature auto tracks for recreational purposes. The following standards shall apply:

1. **Residential Zones.** Where allowed in the use matrices for the zones, the noncommercial on-site use of recreational off-road vehicles shall be subject to the following provisions:

   a. **Minimum Lot Size -** five acres;

   b. Compliance with all applicable development standards under this Title to include, but not be limited to:
      (1) Noise and outdoor lighting standards;
      (2) Issuance of grading and encroachment permits where applicable;
      (3) County erosion, dust control, and air quality standards; and
      (4) Equipment requirements under Subsection E.2 (Non-residential Zones) below in this Section.

2. **Non-residential Zones.** Where allowed in the use matrices for the zones, any commercial or public off-road vehicle (OHV) recreation area shall require all vehicles using the site to be equipped, at a minimum, with the following:

   a. Spark arrestors of a type approved by the U.S. Forest Service;

   b. Noise suppression devices, such as mufflers or silencers, which limit exhaust noise emissions in compliance with threshold levels under Chapter 130.37 (Noise Standards) in Article 3 (Site Planning and Project Design Standards) of this Title. No exhaust system or noise suppression device shall be equipped with a cutout, bypass, or similar device, nor shall it be modified in such a manner to amplify or increase the noise emitted by the subject vehicle; and

   c. Licensing to the extent required by law.

F. **Parks, Day Use.** Uses within this Subsection include neighborhood, community, and regional parks and picnic areas. The following standards shall apply:

1. Use and operation of park facilities shall be limited to daylight hours.

2. Playground equipment shall be centrally located on the park site, or situated in a way that minimizes noise impacts on adjacent residential property owners.

3. Landscaping and parking shall comply with the standards set forth in Chapters 130.33 (Landscaping Standards) and 130.35 (Parking and Loading) in Article 3 (Site Planning and Project Design Standards) of this Title.

4. Signs shall be in compliance with Chapter 130.36 (Signs) in Article 3 (Site Planning and Project Design Standards) of this Title.

5. Lighting shall be limited to security lighting only. Temporary lighting to extend daytime use of the park facilities shall be prohibited.

G. **Swimming Pools and Tennis Courts.**

1. The facilities under this Subsection shall be subject to the standards under Subsection F (Parks, Day Use) above in this Section except as follows:

   a. A noise analysis will be required for a swimming pool facility within 500 feet of a residential zone, prior to permit approval. If the noise analysis shows that the noise levels will exceed the daytime standards of Chapter 130.37 (Noise Standards) in Article 3 (Site Planning and Project Design Standards) of this Title, a Conditional Use Permit shall be required in compliance with Section 130.52.021 (Conditional Use Permits) in Article 5 (Planning Permit Processing) of this Title.

a. When open for nighttime use, a Conditional Use Permit shall be required, subject to Section 130.52.021 (Conditional Use Permits) in Article 5 (Planning Permit Processing) of this Title.

130.40.220 Outdoor Retail Sales

A. **Content.** This Section is regulates the operation of permanent and temporary outdoor retail.

B. **Permanent Outdoor Retail Sales.** Areas of commercial development intended to be used for outdoor retail sales on a permanent or ongoing basis shall be allowed where shown in the use matrices for the zone. Outdoor retail sales areas may be conducted as a primary use, such as a vehicle sales lot or plant nursery, or as an accessory use, such as a sales yard, nursery area, or vending machine in conjunction with a building materials or other retail store. Outdoor seating at a restaurant, whether conducted as a primary or accessory use, shall also be subject to the standards of this Subsection. The following standards shall apply:

1. A permanent outdoor retail sales area shall be distinct and separate from parking and loading areas, walkways, and landscaping areas.

2. Sales areas shall be included in square footage calculations when determining parking requirements under Section 130.35.030 (Parking and Loading) in Article 3 (Site Planning and Project Design Standards) of this Title.

3. All development standards under the specific zone shall apply, as well as those general standards applicable to the site plan, such as landscaping, lighting, signs, and noise (See Chapters 130.33 (Landscaping Standards), 130.34 (Outdoor Lighting), 130.36 (Signs), and 130.37 (Noise Standards)) in Article 3 (Site Planning and Project Design Standards) of this Title.

4. A permanent outdoor retail sales area shall be screened from the side and rear property lines adjacent to residentially zoned property.

5. Surfacing requirements of the outdoor sales area shall consist of concrete or asphalt pavement, chip seal, gravel, or other material that can be maintained in a dust-free condition. Vehicle access and parking areas shall be surfaced in compliance with County design standards.

C. **Temporary Outdoor Retail Sales.** Temporary outdoor retail sales such as farmers' markets, arts and craft fairs, seasonal sales, swap meets/flea markets, sidewalk sales, and mobile food vendors are allowed subject to the issuance of an Administrative Permit (See Section 130.52.010: Administrative Permit, Relief, or Waiver) in Article 5 (Planning Permit Processing) of this Title, unless otherwise specified below and under Subsections D through H (Certified Farmers' Markets; Garage Sales; Seasonal

Sales; Swap Meets/Flea Markets; Itinerant Sales, respectively) below in this Section. The following standards shall apply:

1. **Location.** The temporary sales area shall not block any emergency access route or otherwise disrupt general vehicular or pedestrian circulation of the shopping center or public street on which the retail business is located.

2. **Hours of Operation.** The temporary sales area shall be conducted during daylight hours only, with all sales facilities, signs, and any related vehicles removed from the site at the close of daily business. Except where otherwise prohibited by this Section, night operations are allowed only when specifically authorized through Temporary Use Permit approval (See Section 130.52.060: Temporary Use Permit) in Article 5 (Planning Permit Processing) of this Title.

3. **Parking Requirements.** Parking requirements shall be in conformance with Table 130.35.030.1 (Schedule of Off-Street Vehicle Parking Requirements) in Chapter 130.35 (Parking and Loading) in Article 3 (Site Planning and Project Design Standards) of this Title for each specific use. Parking shall be available to accommodate employee and customer parking needs either on-site or on adjacent to property, provided a shared parking agreement between the applicant and the adjacent property owner has been notarized and submitted with the application. Parking along the road frontage(s) may be allowed subject to the review and approval of the Department of Transportation. If the temporary sales area is located within an existing parking lot, adequate alternative parking must be available.

4. **Surfacing.** Surfacing materials shall comply with Subsection B.5 (Permanent Outdoor Retail Sales) above in this Section.

5. **Signs.** Signs allowed in conjunction with temporary outdoor retail sales are subject to provisions of Chapter 130.36 (Signs) in Article 3 (Site Planning and Project Design Standards) of this Title for size and placement standards. Sign placement shall be limited to one day prior to the first day of the sales event and removal shall be required at the close of business on the last day of the event.

6. **Duration.** Unless otherwise stated in Subsections D through H (Certified Farmers' Markets; Garage Sales; Seasonal Sales; Swap Meets/Flea Markets; Itinerant Sales, respectively) below in this Section, a sales event shall run no more than three consecutive days in the same location, with no more than three such sales events occurring during a calendar year beginning January 1. This standard may be modified through Temporary Use Permit approval where it is found that the proposed site will be provided with adequate parking and restroom facilities and that the surrounding area can sustain traffic volumes generated by the sales event without adverse effects in the area.

D. **Certified Farmers' Markets.** In addition to the standards under Subsection C (Temporary Outdoor Retail Sales) above in this Section, Certified Farmers' Markets are subject to all applicable provisions of Sections 47002 et seq. of the California Food and Agriculture Code and shall register with the Department of Agriculture, Weights and Measures. Certified Farmer's Markets are exempt from Subsection C.6 (Duration) above in this Section.

E. **Garage Sales.** Garage sales or similar uses may be allowed by right by the residents of the property only, subject to the following standards:

1. Garage sale activity shall not be conducted in the public right-of-way, including streets, sidewalks, parkways, or alleys.

2. Items sold at garage sales shall be used goods, wares, or merchandise of a household nature, and shall not have been acquired elsewhere for resale.

3. Single-unit residential dwellings shall be allowed a maximum of four garage sales per calendar year at the same address. Each garage sale may be allowed for up to 3 days and shall not exceed a total of 12 days per calendar year at the same address.

4. Multi-unit residential dwellings shall be allowed a maximum of two garage sales per calendar year per legal dwelling unit.

5. Garage sale advertising signs shall comply with the standards under Subsection 130.40.210.C.5 (Temporary Outdoor Retail Sales, Signs) above in this Chapter as to duration and with Chapter 130.16 (Signs) in Article 3 (Site Planning and Project Design Standards) of this Title, and further shall not be posted on telephone poles, streetlights, traffic signs, or any other structure or location within the public right-of-way.

6. Garage sales that exceed the standards provided in this Subsection shall be considered a temporary use requiring issuance of a Temporary Use Permit in compliance with Section 130.52.060 (Temporary Use Permit) in Article 5 (Planning Permit Processing) of this Title.

F. **Seasonal Sales.** Seasonal sales, as defined in Article 8 (Glossary: see "Seasonal Sales) of this Title, shall be subject to the following:

1. **Time Limit.** Seasonal sales products grown in a location separate from where they are sold shall be limited to a period of 45 consecutive days.

2. **Merchandise.** The area dedicated to seasonal sales shall not contain the sale of any merchandise not directly associated with the season identified by the applicant as the basis for the seasonal sales activity.

3. **Location.** Seasonal sales shall be conducted outside of any public right-of-way or road easement unless an encroachment permit is approved by the Department of Transportation. Off-site sales may utilize a shopping center parking lot subject to a maximum reduction of 20 percent of the total amount of available parking.

4. **Hours of Operation.** Seasonal sales shall be conducted between the hours of 8:00 a.m. and 10:00 p.m. unless otherwise restricted.

5. **Lighting.** Lighting shall be subject to the requirements in Chapter 130.34 (Outdoor Lighting) in Article 3 (Site Planning and Project Design Standards) of this Title.

G. **Swap Meets/Flea Markets.** These temporary events may be conducted on the site of another use established in compliance with this Title in a commercial or industrial zone, provided that such site is not adjacent to a residential zone.

1. **Limitation on Use.** The sale of vehicles is not allowed.

2. **Site Surfacing.** Portions of a swap meet site used for sales activities or pedestrian circulation shall be surfaced in compliance with Subsection B.5 (Permanent Outdoor Retail Sales) above in this Section or with planted and maintained lawn.

H. **Itinerant Sales.**

Transient produce, food, flower, or merchandise stands that are not part of a temporary use or event authorized in compliance with this Section, are not authorized by another permit or license, or that are not operated as a produce stand in compliance with Section 130.40.240 (Produce Sales) below in this Chapter are prohibited.

130.40.230 Private Schools in Light Manufacturing Facilities

A. **Applicability.** Private schools and their accessory uses allowed under the use matrices for zones allowing light manufacturing uses, as defined in Article 8 (Glossary: see "Light Manufacturing") of this Title, are subject to the standards and permitting requirements of this Section.

B. **Exemptions.** Trade schools that provide training in skills that would be compatible with the uses in zones allowing light manufacturing shall be exempt from this Section.

C. **Permit Requirements.** The use of light manufacturing facilities for private schools shall be subject to discretionary review. As part of discretionary approval, the review authority shall determine:

1. There is sufficient land or structures available in the adjacent area or business park in which the school is located to accommodate the expected demand for light industrial uses.

2. Sufficient outdoor play area is provided to accommodate the number of children anticipated or approved by the discretionary permit, with age-appropriate play facilities on the site of the school.

3. The location of the school will not detract from or compromise current or future light industrial uses in the vicinity.

4. The private school conforms to all other requirements of this Title, including, but not limited to parking and signs (Chapters 130.35 (Parking and Loading) and 130.36 (Signs), respectively) in Article 3 (Site Planning and Project Design Standards) of this Title.

D. **General Standards.**

1. Where it can be demonstrated that shared parking can accommodate the anticipated parking demand based on alternating use schedules, a school shall not be required to provide additional parking with the exception of meeting ADA requirements for access to the school building.

2. An adjacent site may be utilized for parking with submittal of a written, binding agreement with the adjacent land owner allowing use of their site for this purpose.

3. Utilization of parking and/or loading areas for outdoor play shall be prohibited.

4. A drop-off and pick-up area shall be provided that does not conflict with traffic flow or impact parking areas.

130.40.240 Produce Sales

A. **Applicability.** The standards set forth in this Section shall apply to produce sales, as defined in Article 8 (Glossary: see "Produce Sales") of this Title, where allowed in the use matrices for the zones.

B. **General Standards.** Sale of produce grown on-site shall be subject to the following:

1. Sales may occur on-site subject to adequate off-road and/or road frontage parking.

2. One produce stand, as defined in Article 8 (Glossary: see "Produce Stand") of this Title, may be used subject to the following requirements:

   a. The stand shall measure 200 square feet or less in size and be situated a minimum of 50 feet from the nearest side or rear property line.

   b. An encroachment permit shall be secured from the Department of Transportation if the produce stand is accessed from a County road.

   c. Parking requirements shall be in compliance with Table 130.35.030.1 (Schedule of Off-Street Vehicle Parking Requirements) in Chapter 130.35 (Parking and Loading) in Article 3 (Site Planning and Project Design Standards) of this Title. The parking area shall meet minimum setback standards for the zone and shall be designed to prevent vehicles from backing into the roadway. Said parking area may be of gravel or dirt surface, but dust control measures shall be implemented as needed to comply with Air Pollution Control District standards.

C. **Value-added Agricultural Products.** Value-added agricultural products, as defined in Article 8 (Glossary: see "Agriculture, Value-added Product") of this Title, created from products grown on-site, may be sold concurrently with agricultural products on-site. Products shall comply with all local, and state and federal laws and regulations.

D. **Off-site Sales.** No direct sales of produce grown off-site or of any other merchandise, including wholesale or retail nursery products, shall be allowed by right. Off-site produce sales, when in conjunction with a shared multi-farm produce stand, may be allowed subject to approval of a Minor Use Permit (See Section 130.52.020: Minor Use Permits) in Article 5 (Planning Permit Processing) of this Title.

E. **Ranch Marketing.** Produce sales in excess of the requirements of this Section, shall be subject to Section 130.40.260 (Ranch Marketing) below in this Chapter.

130.40.250 Public Utility Infrastructure

A. **Applicability.** Public utility infrastructure, as defined in Article 8 (Glossary: see "Public Utility Infrastructure") of this Title, may be established as an allowed use in any zone, subject to Subsections B through D (Allowed by Right; Administrative Permit Required; Conditional Use Permit Required, respectively) below in this Section, provided that the routes and site locations of the proposed lines or facilities be submitted to the Department for a finding of consistency with the General Plan during the preliminary planning stages, prior to the adoption of the routes and site locations(s) and/or acquisition of right-of-way.

B. **Allowed by Right.** Public utility infrastructure is allowed by right when said facilities do not exceed the height limit of the zone by more than 15 feet and do not create potential safety and health hazards to adjacent property owners, present or future.

C. **Administrative Permit Required.** Notwithstanding Subsection B (Allowed by Right) above in this Section, an Administrative Permit in compliance with Section 130.52.010 (Administrative Permit, Relief, or Waiver) in Article 5 (Planning Permit Processing) of this Title shall be required for the following:

1. Overhead public utility infrastructure proposed to be constructed in the Airport Transportation Corridor (TCA) zone or Airport Safety (-AA) Combining Zone (See Section 130.27.100: Airport Noise and Safety Contour (-ANS) in Article 2 (Zones, Allowed Uses, and Zoning Standards) of this Title). Said permit shall be subject to the review and approval of the Airport Land Use Commission.

2. Public utility infrastructure that exceeds the height limitations of the zone, as set forth in Subsection B (Allowed by Right) above in this Section, but is less than 150 feet in height or does not comply with setback standards.

D. **Conditional Use Permit Required.** A Conditional Use Permit in compliance with Section 130.52.021 (Conditional Use Permits) in Article 5 (Planning Permit Processing) of this Title shall be required for the following:

1. Where the construction of the public utility infrastructure creates a potential safety or health hazard to adjacent property owners, present or future, as determined by the Director.

2. Where the construction of the public utility infrastructure exceeds 150 feet in height.

130.40.260 Ranch Marketing

A. **Applicability.** Except as provided in Subsection B (Exceptions) below in this Section, the regulations and standards of this Section shall apply to ranch marketing uses, as defined in Article 8 (Glossary: see "Ranch Marketing") of this Title, where allowed in the use matrices for the zones on lots that meet the following minimum criteria:

1. **Minimum Lot Size.** Ten gross acres;

2. **Minimum Cropland Area.** As defined in Subsection C (Definitions: See "Minimum Cropland Area" below in this Section):

a. Five acres of permanent agricultural cropland; or

b. 10 acres of annual agricultural cropland in production;

c. The minimum cropland area shall be properly maintained and cared for to produce a commercial crop, as determined by the County Agricultural Commissioner. Failure to maintain cropland will void the ranch marketing uses of this Section;

d. A smaller acreage amount may qualify for Ranch Marketing if minimum production standards are met, as determined by the Agricultural Commissioner and approved by the Director.

3. Agricultural production is the primary use or function of the property. The Agricultural Commissioner may review the proposed Ranch Marketing area to ensure that the site conforms to the standards in Subsection 130.40.260.D.2 (General Standards, Maximum Ranch Marketing Area) below in this Section. Ranching marketing activities proposed on or adjacent to land zoned Planned Agriculture (PA), Limited Agriculture (LA), Agricultural Grazing (AG), Forest Resource (FR), or Timber Production (TPZ) must be reviewed by the Director for consistency with General Plan Policy 2.2.5.2 and for new uses by the Agricultural Commissioner and Ag Commission for compatibility with surrounding agricultural land uses or on agriculturally zoned lands prior to action by the review authority.

B. **Exceptions**. This Section does not apply to the following uses:

1. Produce sales, as defined in Article 8 (Glossary: see "Produce Sales") of this Title, for the direct sale of products grown on-site.

2. Indirect sales by mail, telephone, or internet where delivery of the goods occurs off-site.

3. Direct sale of value-added agricultural products created from products grown on-site.

C. **Definitions.** As used in this Section, the terms below will mean the following:

"**Bake shop**" means a facility for the preparation and consumption of food items in which agriculture products grown on-site are used as a main ingredient for at least one of the baked goods (i.e. pies, turnovers, and other pastries.) Baked goods made from other ingredients may be offered for sale concurrently with goods made from produce grown on-site.

"**Choose and Cut Tree Sales**" shall mean a commercial operation where the public is allowed on a site where evergreen trees are grown in order to personally select a specimen, cut it, and transport it off-site for their use as a Christmas tree.

"**Christmas Tree Season**" is the time period beginning November 1 and ending on Christmas Day.

"**Food Stand**" means a food-serving facility used in conjunction with a ranch marketing operation serving prepared food from products grown on-site or off-site and for which indoor seating is not provided.

"**Harvest Season**" shall mean the time period in which the primary crop(s) is harvested on-site and in which certain ranch marketing activities associated with that crop may occur. The season shall begin with the first day of the month in which the crop is harvested and conclude with the last sale of the primary crop(s) harvested that season.

"**Minimum Cropland Area**" shall mean the minimum required area planted and maintained in crop production, as defined in Article 8 (Glossary) of this Title, using standard horticultural practices with regard to irrigation, plant spacing, pruning, and pest and predator control.

"**Properly Maintained**" shall mean that the planted crops are tended in a manner consistent with proper and accepted customs and standards of the Agricultural industry including but not limited to the provision of irrigation, the control of pests and diseases, and the protection against deer depredation.

"**Ranch Marketing Area**" shall mean an area used for ranch marketing activities, not including land planted in cropland, and packing and storage facilities, unless those areas are also used for accessory ranch marketing activities as set forth in Subsections D and E (General Standards, and Development Standards, respectively) below in this Section.

"**Special Events**" shall mean events such as charitable events, promotional events, and facility rental events, where more than 50 persons are in attendance, subject to the limitations set forth in Subsection F.1.e (Ranch Marketing Uses: Special Events) below in this Section. Facility rental events involve the property, or portions thereof, being rented or donated for weddings, parties, company picnics, and similar social gatherings.

D. **General Standards.**

1. **Concurrency**. The uses identified in Subsections F, G, and H (Ranch Marketing Uses for Crop Production; Ranch Marketing Provisions for Christmas Tree Sales; and Ranch Marketing Provisions for Agricultural Grazing Lands (Large Animal, respectively) below in this Section, shall be conducted concurrently with the on-site sale of agricultural products grown on-site and/or value-added, except as provided below:

a. Marketing activities, as provided in Subsection F.1.c ((Ranch Marketing Uses: Marketing Activities and Accessory Uses) below in this Section, may be allowed concurrently with the sale of off-site produce or value-added if:
   (1) The off-site produce or value-added are, or are made from, the same type of produce grown on-site;
   (2) All other requirements of this Section are met.

b. Special events, as provided in Subsection F.1.e (Ranch Marketing Uses: Special Events) below in this Section may occur at any time, subject to all other provisions of this Section.

2. **Maximum Ranch Marketing Area**. The total ranch marketing area, as defined in Subsection C (Definitions: See "Ranch Marketing Area") above in this Section, cannot occupy more than five acres or 50 percent of the lot, whichever is less. The total enclosed square footage of all ranch marketing buildings shall not exceed the square footage shown in Table 130.40.260.1 (Ranch Marketing Use Matrix) below in this Section. Any building, or group of ranch marketing and accessory buildings, exceeding the square footage in the following table shall require a Conditional Use Permit, in compliance with Section 130.52.021 (Conditional Use Permits) in Article 5 (Planning Permit Processing) of this Title. Ranch marketing buildings do not include residential buildings, garages, outbuildings, and structures not associated with the ranch marketing operation.

Table 130.40.260.1 – Ranch Marketing Use Matrix

LOT ON WHICH THE RANCH MARKETING OPERATION IS LOCATED	MAXIMUM ALLOWABLE RANCH MARKETING BUILDING AREA
10 acres to less than 20.0 acres	10,000 square feet
20 acres to less than 40.0 acres	40,000 square feet
40.0 acres and larger	60,000 square feet

E. **Development Standards:** Ranch marketing uses shall not be allowed unless they comply with the development standards of the zone and Article 3 (Site Planning and Project Design Standards) of this Title, except as provided below:

1. **Parking**.

a. Parking spaces shall be provided on-site for all Ranch Marketing uses, in compliance with Chapter 130.35 (Parking and Loading) in Article 3 (Site Planning and Project Design Standards) of this Title. No on-street parking is allowed on County-maintained roads.

b. Special events may utilize temporary overflow parking areas that are mowed of dried vegetation to a maximum height of two inches.

c. Areas for bus stop and drop off areas shall be provided for any site that has a minimum of 20 parking spaces. Bus stops and drop off areas may be waived if the parking lot is designed to provide a loop or circular path of travel so that the bus can use the parking drive aisle as a temporary bus stop.

2. **Access.**

a. A ranch marketing facility shall be connected directly to a County-maintained road or state highway, except as provided in Subsections F.2.b (Uses Requiring an Administrative Permit), F.3.f (Uses Requiring a Use Permit), H.2.a (Uses Requiring an Administrative Permit), and H.3.e (Uses Requiring a Conditional Use Permit) below in this Section.

b. Access to a facility shall meet the minimum fire safe standards or same practical effect, as determined by the applicable fire district.

3. **Signs.** See Chapter 130.36 (Signs) in Article 3 (Site Planning and Project Design Standards) of this Title.

4. **Setbacks.** The following minimum setbacks apply to all ranch marketing facilities and outdoor use areas, excluding parking lots and picnic areas:

a. Adjacent to non-residential zones: 50 feet from all property lines.

b. Adjacent to residential zones: 200 feet from all property lines.

c. The 200 foot setback in 4.b above may be reduced to no less than 50 feet by a grant of administrative relief in compliance with Section 130.52.010 (Administrative Permit, Relief, or Waiver) in Article 5 (Planning Permit Process) of this Title.

F. **Ranch Marketing Uses for Crop Production.** Table 130.40.260.2 (Ranch Marketing Uses for Crop Production) below in this Section identifies the allowed Ranch Marketing uses for crop production, subject to the provision below.

Table 130.40.260.2: – Ranch Marketing Uses for Crop Production

LA: Limited Agricultural **PA: Planned Agricultural**	**P** **Permissible (allowed) use** **A** **Administrative permit required (130.52.010)** **TUP** **Temporary use permit required (130.52.060)** **CUP** **Conditional use permit required (130.52.021)** **MUP** **Minor use permit required (130.52.020)** **---** **Use not allowed in zone**		
		PERMIT REQUIRED BY ZONE	
USE TYPE	**LA (10+ acres) (Out of Ag Dist)**	**PA (10+ acres)**	**Reference**
Agricultural Museums	CUP	P	—
Art/Merchandise sales	MUP	P	—
Bake shop	CUP	P	—
Campground			—
Temporary	TUP	TUP	—
Permanent	CUP	CUP	130.40.100
Christmas Trees, choose & cut	A	P	—
Commercial Kitchen			—
Catering, off-site	MUP	P	—
Food preparation, on-site	MUP	P	—
Dining facility	CUP	CUP	—
Events			—
Marketing/promotional	MUP	P	—
Special	CUP	P/MUP/CUP/TUP	—
Food stand	CUP	P	—
Handicraft sales	MUP	P	—
Lodging			—
Agricultural homestays	See Table 130.40.170.1 (Agricultural Lodging)		
Agricultural & timber lodging	See Table 130.40.170.1 (Agricultural Lodging)		
Guest Ranch	See Table 130.40.170.1 (Agricultural Lodging)		
Mechanical rides	CUP	CUP	—
Music festivals & concerts	TUP/CUP	TUP/CUP	—
Picnic Area	A	P	—
Petting Zoo	MUP	P	—

1. **Ranch Marketing Uses.** The following uses shall be allowed by right during the harvest season:

   a. **Bake Shops, and Food Stands, and Dining Facilities.** Bake shops and food stands, subject to the following standards:

      (1) Bake shops, food stands, dining facilities and any other sale of food products shall comply with the California Health and Safety Code, subject to approval from all applicable agencies including, but not limited to El Dorado County Environmental Management Department, California Department of Public Health, and California Department of Food and Agriculture.

(2) A commercial kitchen established for a bake shop, food stand or dining facility can be used off-season to make value-added products from cold storage produce. The on- or off-site sale of said value-added products is not limited to its applicable harvest season.

b. **Handicraft Sales.** Handicraft sales subject to the following standards:

(1) Handicrafts shall be products that are made domestically by hand, normally sold by the person who made them, and do not include items that are mass produced by others;

(2) Vendors shall have a current County business license; and

(3) Vendors may use the site for overnight recreational vehicle camping during the time the vendor occupies the site, subject to any applicable state and county health and safety regulations.

c. **Marketing Activities and Accessory Uses.** Marketing activities and accessory uses such as picnic areas, public tours, hay mazes, pony rides, and tractor rides, and fishing ponds, are limited to daylight hours. Outdoor music shall meet County noise standards. Amplified music or amplified speech shall comply with Chapter 130.37 (Noise Standards) in Article 3 (Site Planning and Project Design Standards) of this Title. For any events with amplified sound, occurring between 7:00 p.m. and 10:00 p.m., a noise analysis shall be submitted to the Department demonstrating that the noise standards will not be exceeded. No outdoor music will be allowed after 10:00 p.m.

d. **Retail Sales.** Retail sales of merchandise, art, and prepackaged food items shall be allowed within the ranch marketing area. The sale of prepackaged food items shall comply with the California Health and Safety Code and be permitted by Environmental Management. The sale of non-agricultural merchandise shall be subordinate to the sale of produce and value-added products.-Retail sale of on-site produce kept in cold storage is not limited to its harvest season.

e. **Special Events.** Special events, subject to the following limitations:

(1) Total of 24 events per calendar year.

(2) Maximum capacity of 250 persons at one time.

(3) Special events shall be limited in time duration to 48 hours, and the event site shall be returned to its pre-event condition after each use, unless the next event is within two weeks, or an administrative permit is approved by the Director.

(4) The total number of special events shall be limited to the number provided in this Section and shall not be cumulative if a lot also qualifies for events under Section 130.40.400 (Wineries) below in this Chapter.

(5) Special events may be held throughout the year and are not limited to the harvest season.

f. **Agricultural Museum.** Agriculturally related museums that primarily display items from California's agricultural history.

2. **Uses Requiring an Administrative Permit.** The following uses are allowed by Administrative Permit in compliance with Section 130.52.010 (Administrative Permit, Relief, or Waiver) in Article 5 (Planning Permit Processing) of this Title:

a. Non-ranch marketing use of an existing commercial kitchen established for a bake shop or food stand as an owner-operated or leased catering facility, subject to approval from all applicable agencies including, but not limited to El Dorado County Environmental Management Department, California Department of Public Health, and California Department of Food and Agriculture.

b. Ranch marketing activities that do not have direct access to a County-maintained road or state highway, provided that the operator of the facility has entered into an agreement to participate in any road maintenance entity (homeowner's agreement, Zone of Benefit, Community Services District, or County Service Area) on roads that serve the site.

c. Ranch marketing uses (See Section 130.40.260: Ranch Marketing, below in this Chapter), limited to the harvest season, shall be allowed year around by Administrative Permit (See Section 130.52.010: Administrative Permit, Relief, or Waiver) in Article 5 (Planning Permit Processing) of this Title.

3. **Uses Requiring a Use Permit.** The following uses are allowed by use permit in compliance with Chapter 130.52 (Permit Requirements, Procedures, Decisions, and Appeals) in Article 5 (Planning Permit Processing) of this Title, as follows:

a. Special events that exceed the provisions of this Section that are on-going or reoccurring. One-time special events may be authorized by Temporary Use Permit in compliance with Section 130.52.060 (Temporary Use Permit) in Article 5 (Planning Permit Processing) of this Title.

b. Campgrounds, Temporary Campgrounds and commercial stables.

c. Dining facility to the following standards;

(1) Dining facilities and any other sale of food products shall comply with the California Health and Safety Code, subject to approval from all applicable agencies including, but not limited to Environmental Management, California Department of Public Health, and California Department of Food and Agriculture.

(2) A commercial kitchen established for a bake shop, food stand or dining facility can be used off-season to make value-added products from cold storage produce. The on- or off-site sale of said value added products is not limited to its harvest season.

d. Mechanical amusement rides, helicopter rides, and similar non-agricultural activities.

e. Concerts or other live, outdoor amplified music where the music is the primary attraction.

f. Ranch marketing activities that do not have direct access onto a County-maintained road or state highway and do not participate in a road maintenance agreement.

g. In addition to the findings required under Subsection 130.52.021.C (Specific Findings for Conditional Use Permits) in Article 5 (Planning Permit Processing) of this Title, the following findings shall be made by the review authority prior to approving a Conditional Use Permit under this Section:

(1) The site meets the minimum acreage and planting standards.

(2) The use is secondary and subordinate to the agricultural use.

(3) The use does not detract from or diminish the on-site agricultural uses.

(4) There is no adverse effect on agricultural production on surrounding properties.

(5) For lands under Williamson Act contract, the use is compatible with the provisions of California Government Code Section 51200 et seq.

G. **Ranch Marketing Provisions for Christmas Tree Sales.** The provisions of this Subsection apply only to operations whose primary product are Christmas trees and are not in addition to other uses allowed by this Section. The following ranch marketing provisions shall be allowed where Christmas trees are grown on sites that meet the minimum acreage and planting standards of Subsection A (Applicability) above in this Section:

1. Choose and cut tree sales, as defined in Subsection C (Definitions: See "Choose and Cut Tree Sales") above in this Section.

2. Retail sales in compliance with Subsection F.1.d (Ranch Marketing Uses: Retail Sales) above in this Section.

3. The sale of pre-cut Christmas trees grown off-site provided they are sold concurrently with Christmas trees grown on-site and the primary crop (greater than 51 percent) is grown on-site.

4. Special events outside of the Christmas tree season on lots of 10 acres or more, subject to the following minimum standards:

    a. Two events on lots with five acres or more of planted Christmas trees.

    b. Five events on lots with ten acres or more of planted Christmas trees.

H. **Ranch Marketing Provisions for Agricultural Grazing Lands (Large Animal)**. The provisions of this Subsection apply only to cattle grazing operations and are not in addition to other uses allowed by this Section. The following ranch marketing provisions shall provide a ranch atmosphere and natural environment for Guest Ranches, as allowed for in 130.40.170 (Lodging Facilities) above in this Chapter and as defined in Article 8 (Glossary) of this Title, and other events and activities defined in this ordinance and shall be allowed on land zoned Agricultural Grazing (AG). Table 130.40.260.3 (Ranch Marketing Uses for Agricultural Grazing Lands) below in this Section identifies the allowed Ranch Marketing uses for Agricultural Grazing Lands with large animal operations, subject to the provision below.

Table 130.40.260.3 – Ranch Marketing Uses for Agricultural Grazing Lands

AG: Agricultural Grazing	**P** Permissible (allowed) use **A** Administrative permit required (130.52.010) **T** Temporary use permit required (130.52.060) **CUP** Conditional use permit required (130.52.021) **MUP** Minor use permit required (130.52.020) **---** Use not allowed in zone			
USE TYPE	**AG** (160+ acres)	**AG** (40 to 160 acres)	**AG** (less than 40 acres)	**Reference**
Agricultural Museums	P	P	MUP	—
Art/Merchandise sales	P	P	MUP	—
Campground				—
Temporary	P	P	A	
Permanent	CUP	CUP	CUP	130.40.100
Commercial Kitchen				—
Catering, off site	P	P	MUP	—
Food preparation, on-site	P	P	MUP	—
Dining facility	CUP	CUP	CUP	—
Events				—
Marketing/promotional	P	P	CUP	—
Special	P	A	CUP	—
Fishing & Hunting	P	P	A	—
Food stand or chuck wagon	P	A	CUP	—
Handicraft sales	P	A	MUP	—
Lodging				—
Ag Homestays	See Table 130.40.170.1 (Agricultural Lodging)			130.40.170
Agricultural & timber lodging	See Table 130.40.170.1 (Agricultural Lodging)			130.40.170
Guest ranches	See Table 130.40.170.1 (Agricultural Lodging)			130.40.170
Mechanical rides	CUP	CUP	CUP	
Music festivals & concerts	T/CUP	T/CUP	T/CUP	—
Petting zoo	P	P	MUP	—
Picnic Area	P	P	A	—
Round-ups, rodeos, etc.	P	A	CUP	—
Stables, commercial	P	A	MUP	—
Trail rides	P	A	MUP	—

1. Ranch Marketing Uses on Grazing Lands.

a. Round-ups, rodeos, or other similar activities;

b. Camping, fishing, hunting, horseback riding;

c. Marketing Activities and Accessory Uses in compliance with Subsection F.1.c (Ranch Marketing Uses: Marketing Activities and Accessory Uses) above in this Section;

d. Food Stands or Chuck Wagons in compliance with Subsection F.1.a (Ranch Marketing Uses: Bake Shops, and Food Stands, and Dining Facilities) above in this Section;

e. Retail sales in compliance with Subsection F.1.d (Ranch Marketing Uses: Retail Sales) above in this Section;

f. Special Events in compliance with Subsection F.1.e (Ranch Marketing Uses: Special Events) above in this Section;

g. Museum as defined in Subsection F.1.f (Ranch Marketing Uses: Agricultural Museum) above in this Section.

2. Uses Requiring an Administrative Permit.

a. Ranch marketing activities that do not have direct access to a County-maintained road or state highway**,** provided that the operator of the facility has entered into an agreement to participate in any road maintenance entity (homeowner's agreement, Zone of Benefit, Community Services District, or County Service Area) on roads that serve the site;

b. Use of existing permanent structures and/or temporary structures;

c. Other uses found compatible with grazing operations.

3. Uses Requiring a Conditional Use Permit.

a. Concerts or other live, outdoor amplified music where the music is the primary attraction, unless a one-time event, in which case, a Temporary Use Permit would apply;

b. Special events that exceed the provisions of this Section that are on-going or reoccurring. One-time special events may be authorized by Temporary Use Permit in compliance with Section 130.52.060 (Temporary Use Permit) in Article 5 (Planning Permit Processing) of this Title;

c. Dining facility;

d. Ranch marketing activities that do not have direct access onto a County-maintained road or state highway and do not participate in a road maintenance agreement;

e. In addition to the findings required under Subsection 130.52.021.C (Special Findings for Conditional Use Permits) in Article 5 (Planning

Permit Processing) of this Title, the following findings shall be made by the review authority prior to approving a Conditional Use Permit under this Section:

(1) The use is secondary and subordinate to the agricultural use.

(2) The use does not detract from or diminish the on-site agricultural uses.

(3) There is no adverse effect on agricultural operations on surrounding properties.

(4) For lands under Williamson Act contract, the use is compatible with the provisions of California Government Code Section 51200 et seq.

Parcels that do not meet the above acreage criteria, but have over 40 acres of grazing land and have agricultural zoning, may qualify for Ranch Marketing activities with an Administrative Permit. For those parcels under 40 acres with agricultural zoning, a Minor or Conditional Use Permit shall be required. (See Table 130.40.260.3: Ranch Marketing Uses for Agricultural Grazing Lands, above in this Section).

K. **Ranch Marketing Provisions for Small Livestock Operations:** ***Reserved***

130.40.270 *Reserved*

130.40.280 Recycling Facilities

A. This Section is to facilitate the placement of recycling facilities to enhance waste stream reduction, while providing standards to ensure appropriate location, noise attenuation, and hazardous material handling to protect the public health, safety, and welfare.

B. **Recycled Oil Collection Facilities.** Used oil may be collected for recycling, subject to the following standards:

1. In all zones where automotive and equipment service, gasoline sales, small engine repair, and aircraft service and repair use types are allowed, the collection of used oil may be allowed by right, provided the use conforms to all applicable state laws and County requirements.

2. Recycled oil collection facilities located as a part of any use other than those listed in B.1 above in this Section shall be subject to an Administrative Permit based on the findings under Subsection C.2 (Recycling Collection Facilities) below in this Section, as well as all applicable state and County requirements.

C. **Recycling Collection Facilities.** Recycling collection facilities as defined in Subsection C.1 below in this Section, shall be allowed as a secondary use in General

Commercial (CG), Community Commercial (CC), and Industrial Low (IL) zones by Administrative Permit, and allowed in the Commercial Rural (CRU) zone by CUP. Approval from the Director shall be granted if the proposed use and site plan are in compliance with the findings required in Subsection C.2 below in this Section.

1. **"Recycling collection facilities"** shall be defined for the purposes of this Section as:

    a. Reverse vending machines, which are mechanical devices that accept one or more types of empty beverage containers and issue a cash refund or redeemable coupon. Some machines will also dispense coupons and promotional materials. The machines identify containers by reading the bar code, scanning the shape, or by other methods.

    b. Mobile recycling units, which are properly licensed automobiles, trucks, trailers, or vans used for the collection of recyclable material such as aluminum, glass, plastic, and paper.

    c. Small collection facilities no larger than 500 square feet, which are intended for collection only. They have room for limited day to day storage of material, and do not include power driven processing equipment except as part of reverse vending machines. Small collection facilities are usually located outdoors.

2. The following findings shall be made by the Director prior to Administrative Permit approval:

    a. The facility is established in conjunction with an existing commercial or industrial use, or community service facility, and is in compliance with all applicable County Codes;

    b. The facility itself is clearly marked to identify the name and telephone number of the facility operator and hours of operation, and displays a notice stating that no material shall be left outside the recycling enclosure or containers;

    c. The facility's schedule will accommodate daily collection needs and storage capacity on the site;

    d. The facility is set back a minimum of ten feet from any road easement, is screened from view from said easement, and does not obstruct pedestrian or vehicular circulation;

    e. The facility is no larger than 500 square feet and occupies no more than five parking spaces, not including space that will be periodically needed for removal of materials or exchange of containers;

f. The facility's occupation of existing parking space by its customers and attendant does not reduce available parking space below the minimum number required for the primary use of the site, unless all of the following conditions exist:

(1) The facility is located in a convenience zone, as defined in Article 8 (Glossary) of this Title, or a potential convenience zone, as designated by the California Department of Conservation;

(2) A parking analysis demonstrates that existing parking capacity is not already fully utilized by the primary use during the time the recycling facility will be on the site. A reduction of 20 percent of available parking in an established parking facility may then be allowed up to a maximum of 15 spaces. When the primary use is a community facility, a maximum reduction of five spaces will be allowed.

g. No additional parking space for a small collection facility will be required in an established parking facility. One space may be dedicated for the attendant, if excess parking is available;

h. Attended facilities located within 100 feet of a property zoned or occupied for residential use will limit their hours of operation between 9 a.m. to 7 p.m. and be fully screened from view from said residential property;

i. Containers for the 24 hour donation of materials are located at least 30 feet from any property zoned or occupied for residential use, unless there is a recognized service corridor and acoustic shielding between the containers and the residential use that will reduce noise impacts consistent with Chapter 130.37 (Noise Standards) in Article 3 (Site Planning and Project Design Standards), and the containers are fully screened from view from said residential properties;

j. The collection containers are insulated so that noise generated by associated activities shall not exceed thresholds for non-transportation noise sources under Chapter 130.37 (Noise Standards) in Article 3 (Site Planning and Project Design Standards);

k. The facility will not use power driven processing equipment, except for reverse vending machines;

l. The facility shall store all recyclable material in containers or in the mobile unit vehicle, and shall not leave materials outside of containers when the attendant is not present;

m. The facility will use containers that will be of a sufficient capacity to accommodate the daily collection of materials. The containers will be constructed and maintained with durable waterproof and rust resistant material that will remain covered when the site is unattended, and secured from unauthorized entry and removal of material;

n. The facility will accept only glass, metals, plastic containers, and paper material. Containers are to be clearly marked to identify the type of material which may be deposited in each;

o. No advertisement, posters, or flyers will be attached temporarily or otherwise to the containers; and

p. The facility will be maintained free of litter and will be swept at the end of each collection day. All other undesirable materials are to be removed at the end of each collection day.

130.40.290 Right To Farm

A. It is the policy of the County to conserve and protect agricultural land and to encourage agricultural operations within the County. Where nonagricultural land uses, including but not limited to residential development, extend into or are adjacent to areas of agricultural land, agricultural operations have become the subject of nuisance complaints. As a result, agricultural operations are sometimes forced to curtail or cease operations, and operators are discouraged from making investments in farm improvements to the detriment of the economic viability of the County's agricultural industry as a whole. It is the purpose and intent of this Section to reduce the loss to the County of its agricultural resources by limiting circumstances under which agricultural operations may be considered a nuisance. This Section is not to be construed in any way as modifying or abridging state law relative to nuisances, but is to be utilized in the interpretation and enforcement of the provisions of this Code and other applicable County regulations.

B. **Definitions.** As used in this Section, the following terms shall have the meanings set forth below:

"**Agricultural Land**" is lands which are zoned PA (Planned Agricultural), LA (Limited Agriculture), AG (Agricultural Grazing), FR (Forest Resource), and TPZ (Timberland Production Zone) or lands within a General Plan designated Agricultural District or lots with a General Plan land use designation of Agricultural Land (AL).

"**Agricultural Operations**" are activities relating to agricultural use including, but not limited to, the cultivation and tillage of the soil; the burning of agricultural waste products or other agricultural burning; the protection of crops and livestock from insects, pests, diseases, birds, predators, or other pests that damage or could potentially damage crops; the proper and lawful use of agricultural chemicals,

including but not limited to the application of pesticides and fertilizers; or the raising, production, irrigation, pruning, harvesting, or processing of an agricultural commodity, including any type of crop or livestock, and any forestry improvements and timber harvesting and processing.

C. **Nuisance.** No present or future agricultural operation or any of its appurtenances conducted or maintained for commercial purposes and in a manner consistent with proper and accepted customs and standards of the agricultural industry on agricultural land shall become or be a nuisance, private or public, due to any changed condition of the use of adjacent land in or about the locality thereof. However, the provisions of this Subsection shall not apply whenever a nuisance results from the negligent or improper operation of any such agricultural operation and its appurtenances or if the agricultural activity or appurtenances obstruct the free passage or use in the customary manner of any navigable lake, stream, river, canal, or basin, or any public park, square, street or highway.

D. **Role of Ag Commission.** An interested party may submit a written request to the Ag Commission for an opinion as to whether a particular agricultural operation constitutes a nuisance. In the event a dispute arises between an owner of an agricultural operation and a resident (or residents) in or about the locality thereof as to whether a particular agricultural operation constitutes a nuisance, an interested party may submit a written request to issue an advisory opinion or mediate a dispute. The Agricultural Commissioner may promulgate such regulations as are necessary for the implementation of this Section. The County Farm Advisor from the University of California Cooperative Extension Service may serve as technical advisor to the Ag Commission.

E. **Disclosure Notice.** Every seller of any real property in the unincorporated areas of the County, either directly or through his/her authorized agent, shall provide to any prospective buyer a written disclosure statement advising the buyer of the existence of a Right to Farm Ordinance enacted by the County. Such disclosure statement shall contain or be accompanied by a copy of the Right to Farm Ordinance, Section 130.40.290 (Right to Farm) or successor, and the brochure provided by the County entitled "Agricultural Land Use in El Dorado County". The disclosure statement shall be substantially in the form promulgated by the Agricultural Commissioner, or his/her designee. The written disclosure statement shall include any agricultural setback requirements applicable to the property. The written disclosure statement also shall include a statement that intensive agricultural activities may be conducted on agricultural land within the County. The buyer shall sign a copy of the written disclosure statement acknowledging receipt of the disclosure and accompanying documents and deliver the signed copy to the seller or his/her authorized agent. The seller or his/her authorized agent shall retain the copy of the disclosure statement executed by the buyer in the escrow process.

130.40.300 Secondary Dwellings

A. This Section implements California Government Code Section 65852.150 et seq. regarding secondary dwellings, provide affordable housing alternatives, and protect the public health, safety, and welfare of residents of El Dorado County.

B. **Applicability.** In all zones that permit single-unit residential development, the expansion of the primary dwelling or the construction of a new structure for the purpose of creating a secondary dwelling is allowed by right, except as required by Section 130.40.060.C.3 (Preserve Standards: Residential Development) above in this Chapter, subject to the provisions of this Section.

C. **Development Standards.** The following development standards shall apply to all secondary dwellings:

1. **Maximum Floor Area.** The floor area of a secondary dwelling shall be measured from the outside of the exterior walls including all enclosed habitable or potentially habitable space, such as living areas, hallways, stairwells, attics, basements, storage areas, and equipment rooms, but excluding attached garages. The maximum floor area allowed for both attached and detached dwellings shall be subject to Table 130.40.300.1 (Maximum Floor Area for Attached/Detached Secondary Dwellings) below in this Section, provided an attached secondary dwelling does not exceed 30 percent of the square footage of the primary dwelling, as follows:

Table 130.40.300.1 – Maximum Floor Area for Attached/Detached Secondary Dwellings

Lot Area	Maximum floor area
Up to 9,999 sq ft	600 sq ft
10,000 – 19,999 sq ft	800 sq ft
20,000 sq ft to less than 1 acre	1,200 sq ft
1 acre or greater	1,600 sq ft

2. **General Development Requirements**. A secondary dwelling shall conform to the setbacks, height limits, lot coverage, and other requirements of the zone in which it is located.

3. **Specific Development Requirements.**

a. **Attached Dwellings.**

(1) An attached secondary dwelling shall share a common wall with the primary dwelling or garage. The common wall or portion thereof shall measure a minimum of 10 linear feet on the horizontal plane of the shared surface, to be considered an attached dwelling.

(2) In order for the primary dwelling to maintain its single-unit residential character, the entrance to an attached secondary dwelling shall not be located on the same building face as the entrance to the primary dwelling unless separate entrances to both the primary and secondary dwellings are off of a shared entrance.

4. **Parking.** Parking shall comply with the requirements under Table 130.35.030.1 (Schedule of Off-Street Vehicle Parking Requirements) in Chapter 130.35 (Parking and Loading) in Article 3 (Site Planning and Project Design Standards) of this Title. Said parking space(s) may be in tandem with the parking spaces required for the primary dwelling unless tandem parking is not feasible based upon specific site, fire, or safety restrictions.

5. **Utilities.** Secondary dwellings may be connected to the power source, water supply, and sewage disposal system of the primary dwelling or may have separate connections that provide the same standards required of the primary dwelling, subject to the requirements of the applicable service providers and/or the Environmental Management Department.

D. **Owner Occupancy.** One of the residential dwelling units shall be occupied by the property owner. This Subsection is explicitly intended to prohibit two rental units on lots zoned for one single-unit residential dwelling. A notice of restriction on the subject property that is signed and notarized by the property owner declaring this limitation shall be filed with the Department prior to issuance of the certificate of occupancy for the secondary dwelling.

130.40.310 Solar Collection Systems

A. **Applicability.** As defined in Article 8 (Glossary: see "Solar Collection Systems") of this Title and used in this Section, active solar collection systems may be allowed in any zone in compliance with the general standards in Subsection B (General Standards), below in this Section.

B. **General Standards.**

1. Solar panels located on the roof of an existing structure shall be subject to the height requirements for the zone.

2. Solar panels located on the ground shall be classified as accessory structures, and shall be subject to front yard setback requirements for the zone. Exceptions to side and rear setback requirements shall be subject to Subsection 130.30.030.C.3.f (Projections into Required Setbacks: Solar Collectors) in Article 3 (Site Planning and Project Design Standards) of this Title.

3. Solar paneled structures placed in parking lots, whether public or private, may be counted as part of the shade requirements in compliance with adopted design standards.

4. Solar collection systems constructed for the primary purpose of generating power for sale to a public utility, even if also generating power for use on-site, shall be subject to a Conditional Use Permit in compliance with Section 130.52.021 (Conditional Use Permits) in Article 5 (Planning Permit Processing) of this Title.

130.40.320 Storage Facilities

A. **Applicability.** Storage facilities and outdoor areas including, but not limited to, self storage, vehicle storage, and commercial and industrial equipment and material storage yards are subject to the provisions of this Section where allowed under the use matrices for the zones.

B. **Self Storage Facilities.** The following provisions shall apply to self storage facilities, as defined in Article 8 (Glossary: see "Storage, Self") of this Title):

1. **Self storage facilities** shall be limited to the storage of personal effects of individuals or equipment and materials by businesses inside of a building or buildings. Use of storage facilities for manufacturing, retail, wholesale, or service uses other than storage shall be prohibited. Human occupancy of individual storage units shall be limited to that required for transporting, arranging, and maintaining stored materials.

2. **Vehicle storage areas** may be allowed as an accessory use of a self storage site provided such use is allowed in the zone in which the self storage facility is located. Such storage area shall be fenced, screened, and landscaped in compliance with Subsections C.1 and C.2 (Equipment and Material Storage Yards) below in this Section.

3. Caretaker housing may be provided in compliance with the provisions of Section 130.40.120 (Commercial Caretaker and Agricultural Employee, and Seasonal Worker Housing) above in this Chapter.

C. **Equipment and Material Storage Yards.** In commercial, industrial, and transportation corridor zones, storage yards under this Subsection, as defined in Article 8 (Glossary: see "Storage Yards: Equipment and Material") of this Title, may be allowed as a primary use or as an accessory use to an otherwise allowed use. In the Agricultural, Rural Lands and Timber Production (TPZ) zones, storage yards are limited to storage that is accessory to an allowed use, such as storage of material and/or equipment associated with a resource extraction industry. Storage yards shall

be fully screened from view from public areas such as roads, parking lots, pedestrian walkways, open space, and adjacent residential development, as follows:

1. Screening shall be by building design and placement, solid fence material, landscaped berms, or a combination thereof.

2. Landscaping requirements under Chapter 130.33 (Landscaping Standards) in Article 3 (Site Planning and Project Design Standards) of this Title shall be in addition to the screening requirements.

3. Screening and landscaping requirements can be waived by the Director where the storage yard is located on an Agricultural, Rural Lands, or Resource Zones or on an interior lot within an industrial zone or park and not visible from outside the zone or park.

D. **Residential Storage Areas.** The storage of personal equipment and materials on a residentially-zoned lot shall be allowed as an accessory use to a dwelling subject to the requirements of Section 8.42.700 (Littering, accumulation of litter, and illegal dumping prohibited) of Title 8 (Public Health and Safety) of the County Code of Ordinances and the following provisions:

1. There shall be no limit to the amount of materials or equipment stored when all materials and equipment are stored inside an enclosed structure, in compliance with development standards of the zone and Section 130.40.030 (Accessory Structures and Uses) above in this Chapter.

2. Unenclosed, outside storage area(s) shall be fully screened from view by the public. Storage material shall be placed no higher than the screening material, including existing fencing that complies with Section 130.30.070 (Fences, Walls, and Retaining Walls) in Article 3 (Site Planning and Project Design Standards) of this Title.

3. Vehicle storage shall be subject to the standards in Section 130.40.380 (Vehicle Maintenance, Repair, and Storage, Accessory to a Residential Use) below in this Chapter.

4. The use of semi-trailers, shipping containers such as sea-land containers, railroad cars, and similar storage units shall be allowed on all single family residential parcels greater than one acre, subject to the screening requirements in C.1 and C.2 (Equipment and Material Storage Yards) above in this Section.

130.40.330 Temporary Real Estate Sales Offices

A. **Applicability.** A temporary real estate sales office for the exclusive sale of property within an approved subdivision may be allowed before completion of the subdivision

improvements, where allowed in the use matrices for the zones subject to the standards in Subsection B (General Standards) below in this Section.

B. **General Standards.**

1. Where a temporary sales office is a separate structure and not located within a model home, as defined in Article 8 (Glossary) of this Title, a site plan shall be submitted demonstrating compliance with all applicable development standards under the zone, such as setbacks and building height, as well as building and fire codes, and grading and encroachment ordinances.

2. Any off-site parking areas shall be in compliance with Chapter 130.35 (Parking and Loading) in Article 3 (Site Planning and Project Design Standards) of this Title, except that the surface may be gravel instead of pavement.

3. Exterior lighting shall be in compliance with 130.34 (Outdoor Lighting) in Article 3 (Site Planning and Project Design Standards) of this Title. Floodlights are prohibited.

4. On-site signage and landscaping shall be in compliance with Chapter 130.36 (Signs) and Chapter 130.33 (Landscaping Standards) in Article 3 (Site Planning and Project Design Standards).

5. Temporary sales office shall be allowed until the sale of the final lot in the subdivision.

6. Site restoration shall be required within 60 days of the time limits specified under B.5 above in this Section, as follows:

    a. The real estate sales office shall be removed from the site if it is in a trailer or mobile home. If it is in the garage of a model home, the office shall be converted back to a garage and any off street parking area shall be converted back to residential use.

    b. All temporary structures and related improvements shall be completely removed from the subject site.

7. The review authority may require other conditions of approval deemed necessary to protect the public health, safety, and welfare of persons residing or working in the neighborhood.

130.40.340 ***Reserved***

130.40.350 Timber Production Zone: Criteria, Regulations, and Zone Change Requirements

A. **Content.** This Section implements the provisions and intent of the Forest Taxation Reform Act of 1976 as amended.

B. **Applicability.** Lands subject to the following criteria and regulations are or shall be zoned Timber Production Zone (TPZ).

C. **General Standards.** In addition to the following regulations, lands within the TPZ shall be subject to the allowed uses and development standards under Chapter 130.21 (Agricultural, Rural Lands, and Resources Zones) in Article 2 (Zones, Allowed Uses, and Zoning Standards) of this Title.

D. **TPZ Rezone Application Requirements.** In addition to the requirements set forth in Chapter 130.63 (Amendments and Zone Changes) in Article 6 (Zoning Ordinance Administration) of this Title, the following is required as part of any zone change to TPZ:

1. **Timber Production Assessment.** Based on General Plan Policy 8.3.1.3, the Ag Commission shall assess property to determine its suitability for timber production. Their decision as to suitability shall be based, in part, on the following findings:

   a. Property is identified as meeting Timber Site Classifications I, II, or III, as defined in the *California Forest Handbook* and the *Soil Survey of El Dorado Area* issued April 1974 by the USDA Soil Conservation Service and the U.S. Forest Service;

   b. Property is being used for commercial forestry/timber production;

   c. Property possesses topographical and other features that makes it suitable for timber production; and

   d. No conflict exists with adjacent high density development.

2. **Forest Management Plan.** A forest management plan for the property shall be submitted that has been prepared or approved by a Registered Professional Forester, as defined in Article 8 (Glossary: see "Qualified Professional: Registered Professional Forester") of this Title. Prior to approval of the zone change application, the forest management plan shall be reviewed and approved by the Ag Commission. The forest management plan shall include, at a minimum, a discussion and recommendation on each of the following:

   a. Commercial harvesting, a history of past operations, and recommendations for the future;

b. Provisions for legal and physical access to the property so commercial operations can be carried out;

c. A reasonable attempt to locate the boundaries of the property and attempts to protect the property against trespass;

d. Disease or insect control work;

e. Thinning slash disposal, pruning, and other appropriate silvicultural work;

f. A fire protection plan including a fuels management program;

g. Erosion control on existing roads and skid trails along with maintenance of existing roads; and

h. Planting of a significant portion of the understocked areas of the land.

3. The property shall currently meet the timber stocking standards as set forth in the California Public Resources Code Section 4561 and the forest practice rules adopted by the State Board of Forestry for the district in which the property is located. As an alternative, the owner shall sign an agreement with the Board to meet the timber stocking standards and forest practice rules by the fifth anniversary of the signing of said agreement. After the zone change to TPZ is approved, failure to meet the state's timber stocking standards and forest practice rules within the five year time period will provide the Board grounds for rescinding the zone change of the property.

E. **Continued Eligibility.** The property owner shall continuously comply with at least six of the criteria in the forest management plan required under Subsection D.2 (Forest Management Plan) above in this Section, in order to continue to be eligible for the TPZ classification.

F. **Disclosure Notice of Rezone.** Within 10 days of final action of a zone change application that either includes or deletes property from a TPZ, the Clerk of the Board shall cause to be recorded an instrument which will serve as constructive notice of the zone change action to prospective buyers of the subject property.

G. **Required Findings to Support Residential, Recreational and Other Non-Timber Uses.** Certain uses within the TPZ may be compatible with growing and harvesting timber in certain circumstances, and may be allowed by Conditional Use Permit. When approving a Conditional Use Permit, as allowed in Table 130.21.020 (Agriculture, Rural Lands and Resource Zone Districts Use Matrix) in Article 2 (Zones, Allowed Uses, and Zoning Standards) of this Title, for compatible, non-timber related uses, the review authority shall consider the recommendations of the Ag Commission and shall make the following findings:

1. The proposed use is compatible with and will not detract from the land's ability to produce timber;

2. Fire protection and public safety concerns have been adequately met, including the ability to provide adequate public access, emergency ingress and egress, and sufficient water supply and sewage disposal facilities;

3. The proposed use will not adversely impact the area's watershed, wildlife, and other natural resources.

130.40.360 Transitional Housing

A. **Applicability.** Where allowed under the use matrices for the zones, transitional housing providing for six persons or less (small) shall be allowed by right, while transitional housing providing for more than six persons (large) shall be allowed subject to discretionary permit.

B. **General Standards.** All transitional housing shall conform to the development standards for its zone and under this Title. For those facilities housing seven persons or more the following additional standards shall apply:

1. A facility shall be located a minimum of 1,000 feet from another transitional housing facility, as measured in a straight line without regard to intervening structures, between the nearest point of each property line.

2. A six-foot high solid fence shall be provided along all property lines, in compliance with Section 130.30.070 (Fences, Walls, and Retaining Walls) in Article 3 (Site Planning and Project Design Standards) of this Title.

3. Landscaping shall be regularly maintained and irrigated.

4. No identification signs shall be allowed within any zone allowing single-unit residential use. Signs for transitional housing within nonresidential zones shall comply with Chapter 130.36 (Signs) in Article 3 (Site Planning and Project Design Standards) of this Title.

5. Outdoor activities shall not be conducted between the hours of 10 p.m. and 8 a.m.

6. A valid business license is required prior to operation and shall be maintained as long as the use is in operation.

130.40.370 *Reserved*

130.40.380 Vehicle Maintenance, Repair, and Storage Accessory to a Residential Use

A. **General Standards.** The maintenance, repair, and storage of motor vehicles on lots allowing residential uses by right shall be prohibited unless:

1. All vehicles being stored or repaired are registered to an occupant of the lot; or

2. Vehicle maintenance, repair, retail sale or storage of vehicle parts are in compliance with Section 130.40.160 (Home Occupations) above in this Chapter; and

3. Vehicle storage shall not be allowed in any setback area other than the front setback on an access driveway.

130.40.390 Wind Energy Conversion Systems

A. **Applicability.** This Section complies with California Government Code Section 65893, applicable to wind energy conversion system (WECS), used for electrical energy generation based on the State Energy Commission's *Wind Resource Potential Maps*. Microturbines and Small WECS shall be regulated as accessory structures in all zones while large and utility-scale systems shall be regulated as a primary use in non-residential zones, subject to permitting requirements under Subsection E (Development Standards) below in this Section.

B. **Definitions.** The following definitions shall apply to this Section:

"**WECS**", or "**system**", means a machine which can convert the kinetic energy in wind into a usable form of electrical or mechanical energy, such as a wind turbine or windmill. As used within this Section, a WECS includes all parts of the turbine and the tower upon which it is installed, but does not include power transmission equipment. Turbines are classified as being either on a horizontal or a vertical axis configuration, as shown below:

EXAMPLE: WIND TURBINE CONFIGURATIONS

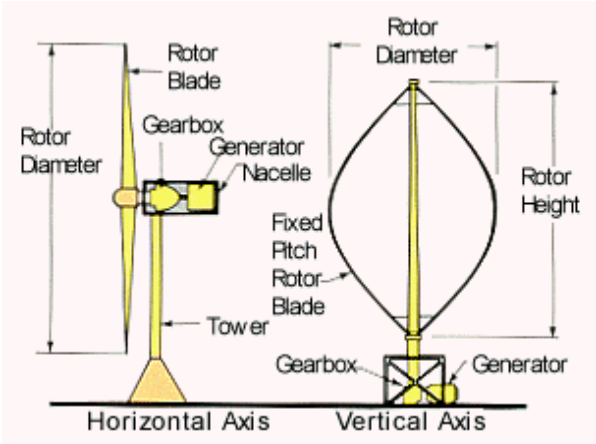

"**Height of tower**" means the height from base grade to the top of the system, including the uppermost extension of any horizontal axis blades.

"**Rated Capacity**" means the electrical generation capacity of one WECS unit. Classifications for rated capacity are microturbine, small WECS, large WECS, and utility-scale WECS, as defined below:

"**Microturbine**" means a WECS that generates one kilowatt (kw) or less.

"**Small WECS**" means one system with a rated capacity of greater than one to less than 50 kw, to be used to provide electrical energy on-site. Excess electricity can be sold back to the utility supplier through net metering, net billing, or similar programs.

"**Large WECS**" means one system with a rated capacity of 50kw to less than 100 kw.

"**Utility Scale WECS**" means one system with a rated capacity of more than 100 kw.

"**Wind Farm**" means two or more utility-scale WECS on the same lot or group of adjacent lots under common ownership. A wind farm may cover an extended area, but the land between the systems may be used for agriculture or other purposes.

C. **Permit Requirements.** WECS are allowed under Table 130.40.390.1 (WECS Use Matrix), below in this Section, in the following zones subject to the rated capacity thresholds designated below:

"P" Allowed use
"A" Use allowed subject to issuance of an Administrative Permit (130.52.010)
"MUP" Use allowed subject to issuance of a Minor Use Permit (130.52.020)
"CUP" Use allowed subject to issuance of a Conditional Use Permit (130.52.021)
Rated capacity designated by a dash (–) is not allowed in the zone.

Table 130.40.390.1 – WECS Use Matrix

	RATED CAPACITY Per Individual WECS Unit[1]				
	Microturbine	Small WECS		Large and Utility Scale WECS	
ZONES	1kw or less	>1kw to less than 10kw	10kw to less than 50kw	50kw to less than 100kw	100kw or greater
Residential (all), RE, Residential-Tahoe Basin	P	A	CUP	—	—
Commercial (all), Industrial, R&D	P	A	A	CUP	CUP
Agricultural and Resource Zones (all)	P	A	A	A/CUP[2]	CUP

Notes:
[1] Subject to maximum number of WECS units provided in Subsection D (Number of WECS Units).
[2] In compliance with Subsection D.3.c (Large WECS in Agricultural and Resource Zones).

D. **Number of WECS Units.**

1. **Microturbines.** The maximum number of microturbines that may be installed on a lot is as follows:

   a. Residential lots less than five acres in size may install a maximum of 5 microturbines.

   b. Residential and agricultural lots five acres or greater in size may install a maximum of 10 microturbines.

   c. All Agricultural and Resource, Commercial, Industrial, and R&D zoned lots may install up to 25 microturbines.

2. **Small WECS.** The maximum number of small WECS units that may be installed on one lot shall be based on the following acreage requirements:

   a. For lots one acre to less than 10 acres, one WECS shall be allowed.

   b. For lots 10 acres to less than 20 acres, two WECS shall be allowed.

   c. For lots 20 acres or greater, a maximum of three WECS shall be allowed.

   d. If small WECS generate less than five kilowatts each and are limited to 50 feet in height, a maximum of two such WECS may be installed per five acres. Additionally, the separation between them may be reduced to twice the height of the tallest tower or manufacturer's specification, whichever is greater.

3. **Large WECS in Agricultural and Resource Zones.**

a. For lots 10 acres to less than 20 acres, one WECS shall be allowed.

b. For lots 20 acres or greater, a maximum of two WECS shall be allowed.

c. Where individual systems exceed 50 kilowatts of rated capacity or where total unit numbers exceed standards under 3.a and 3.b above in this Section, a Conditional Use Permit shall be required, in compliance with Section 130.52.021 (Conditional Use Permits) in Article 5 (Planning Permit Processing) of this Title.

E. **Development Standards.** The following development standards shall apply to all WECS, except that microturbines shall comply with all standards but Subsections E.3, E.4, E.9, and E.12 below in this Section:

1. **General Development Standards.** General development standards shall be applied as set forth in Table 130.40.390.2 (Development Standards) below in this Section;

Table 130.40.390.2 – Development Standards

Rated Capacity (per WECS Unit)	Minimum Lot Size	Setbacks – Freestanding Systems	Maximum Height
Microturbines Up to 1 kw	Subject to Zone Standards		
Greater than 1 – 10kw	1 acre	Greater of tower height or zone standard	80 feet
Greater than 10 to 50kw	5 acres	Tower height	100 feet
Greater than 50 – 100kw	10 acres	Tower height x 2	100 feet
Greater than 100kw	20 acres or Manufacturer's Recommendations	Greater of tower height x 3 or 500 feet	Manufacturer's Recommendations

2. **Safety.** All WECS shall be completely enclosed by a locked, protective fence at least six feet high unless located upon a roof or other location with limited access.

3. **Guy Wires.** Anchor points of any guy wires for a system tower shall be located within the property that the system is located on. Guy wires shall not cross any above-ground electric transmission or distribution lines. The points of attachment for the guy wires shall be either enclosed by a fence six feet

high or sheathed in bright orange or yellow coverings from three to eight feet above the ground.

4. **Tower Access.** Towers must either:

   a. Have tower-climbing apparatus located no closer than 12 feet from the ground;

   b. Have a locked anti-climb device installed on the tower;

   c. Have a tower-access limitation program approved by the review authority;

5. **Rotor Safety.** Each WECS must be equipped with both manual and automatic controls to limit the rotational speed of the blade within the design limits of the rotor.

6. **Electromagnetic Interference.** The WECS shall be designed, installed and operated so that no disrupting electromagnetic interference is caused. Disruptive interference from the facility shall be promptly rectified to include the discontinued operation of one or more WECS.

7. **Utility Notification and Undergrounding.** For inter-connected systems, no wind turbine shall be installed until evidence has been given that the electric utility service provider has been notified and has indicated that the proposed interconnection is acceptable. On-site electrical wires associated with the system shall be installed underground, except for "tie-ins" to the electric utility service provider and its transmission poles, towers, and lines. This standard may be modified by variance if the project terrain is found to be unsuitable due to the need for excessive grading, biological impacts, or similar factors.

8. **Noise.** All WECS shall be subject to the noise standards under Chapter 130.37 (Noise Standards) in Article 3 (Site Planning and Project Design Standards) of this Title or all applicable state laws governing sound pressure levels of WECS, whichever is strictest. Measurement of sound levels shall not be adjusted for, or averaged with, non-operating periods.

9. **Wind Farm Site Access.** Construction of on-site roadways shall be minimized. Temporary access roads utilized for initial installation shall be regraded and revegetated to its natural condition after completion of installation.

10. **Site Aesthetics.** WECS shall be designed and located in the following manner to minimize adverse visual impacts from public viewing areas and private property:

a. Structural components including, but not limited to, towers, blades, and fencing shall be of a nonreflective, unobtrusive color.

b. To the greatest extent feasible, the WECS shall not project above the top of ridgelines.

c. When adjacent to a designated scenic corridor, WECS shall not cause a significantly adverse visual impact either from the corridor, or on a designated scenic viewshed, subject to the requirement under Subsection F.3 (Application Submittal Requirements) below in this Section.

11. **Exterior Lighting.** Exterior lighting on any structure associated with the WECS shall be prohibited, with the exception of that specifically required by the Federal Aviation Administration;

12. **Signs.** Signage shall be considered as part of a Conditional Use Permit, and shall be limited to the following:

a. Signs warning of high voltage electricity shall be posted at a height of five feet above the ground on stationary portions of the WECS or its tower, and at gated entry points to the project site.

b. No advertising sign or logo shall be placed or painted on any WECS or tower;

c. For wind farms, no more than two identification signs relating to the development shall be located on the project site.

d. Signs shall not exceed 16 square feet in surface area or eight feet in height.

13. **Compliance with Federal Aviation Administration (FAA) Regulations**. Small wind energy systems must comply with applicable FAA regulations, including any necessary approvals for installations close to airports.

F. **Application Submittal Requirements.** All applications for Administrative or Conditional Use Permit for a WECS shall include the following:

1. Delineation of the direction of the prevailing winds across the project site.

2. Distance to residentially zoned lots, public and private airports and airstrips, public and private schools within one-quarter mile of the proposed project as measured from its nearest property line.

3. Photo simulations of the proposed WECS as seen from residentially zoned lots and public viewsheds within one mile of the project site.

4. Maximum generating capacity of the WECS unit(s) proposed to be installed.

5. Manufacturer's specifications documenting maximum noise levels generated by the WECS on the surrounding area.

6. A statement by the manufacturer certifying that the rotor and overspeed controls have been designed and fabricated for the proposed use in accordance with good engineering practice, and have been approved by the California Energy Commission or certified by a national program, such as National Electrical Code (NEC), American National Standards Institute (ANSI), or Underwriters Laboratories (UL).

7. Certification by a state licensed structural, mechanical or civil engineer that the tower structures are designed and constructed in compliance with the pertinent provisions of the Building Code and California Electric Code.

8. Written evidence that the electric utility service provider for the proposed site has been informed of the applicant's intent to install an interconnected customer-owned electricity generator. If the applicant does not plan to connect the system to the electricity grid, the applicant shall include a statement to that effect.

9. A description of the proposed measures to minimize adverse noise, transmission interference, visual, and safety impacts to adjacent properties, and methods to prevent public access to the structure.

130.40.400 Wineries

A. **Content.** The winery ordinance:

1. Provides for the orderly development of wineries and accessory uses within specified agricultural zones and specified residential zones to ensure compatibility with adjacent land uses (General Plan Policy 2.2.5.21).

2. Encourages the economic development of the local agricultural industry by allowing for the direct sales and marketing of value added products (General Plan Policy 10.1.5.4).

3. Implements General Plan policies that encourage development of agriculturally-related uses while protecting the agricultural character and long-term productivity of agricultural lands. (General Plan Policies: 8.2.2.1, 8.2.4.2., 8.2.4.3, 8.2.4.4, and 8.2.4.5).

B. **Applicability.** Except as provided in Subsection H (Micro-Wineries and Small Vineyards) below in this Section, the regulations and standards of this Section shall apply to wineries, as defined in Article 8 (Glossary: see "Wineries") of this Title, where allowed in the use matrices for the zones, on lots that are a minimum or 10 acres or more in size with a commercial vineyard.

C. **Definitions.** As used in this Section, the terms below will mean the following:

"**Commercial Vineyard**" means a minimum of five acres of wine grapes are planted and are capable of producing a commercial crop. Five acres shall mean a planting of wine grapes spanning an area of at least 217,800 square feet and consisting of a minimum of 2,200 grape vines that are properly maintained to produce a commercial crop as determined and verified by the Agricultural Commissioner.

"**County Maintained Road**" means a road that is listed on the current County Maintained Mileage List by the Department of Transportation. This list does not typically include County Service Area (CSA) or Zones of Benefit (ZOB) roads.

"**Properly maintained**" means that the planted grapes are tended in a manner consistent with proper and accepted customs and standards of the agricultural industry including, but not limited to, the provision of irrigation, the control of pests and diseases, and the protection against deer depredation.

"**Winery**" means an agricultural processing facility that produces wine from fruit or fruit juices through fermentation or the refermenting of still wine into sparkling wine, that is bonded through the Alcohol, Tobacco Tax and Trade Bureau, and that has a current California Alcohol Beverage Control (ABC) Type 2 Winegrower's License.

D. **Table of Allowed Uses.** Uses allowed under Table 130.40.400.1 (Wineries Allowed Uses Matrix), below in this Section, are subject to compliance with all applicable provisions of this Title and the County Code of Ordinances. Allowed uses may require a discretionary permit in compliance with Subsections F.1 and G.5 (Use Compatibility Limitations, and Access Standards, respectively) below in this Section. The following winery and accessory uses are further defined in Subsection E (Winery Uses) below in this Section:

Table 130.40.400.1 – Wineries Allowed Uses Matrix

LA: Limited Agricultural **PA: Planned Agricultural** **AG: Agricultural Grazing** **RL: Rural Lands** **RE: Estate Residential**	A Administrative Permit (Section 130.52.010) MUP Minor Use Permit (Section 130.52.020) P Allowed use CUP Conditional Use Permit required (Section 130.52.021) TUP Temporary Use Permit (Section 130.52.060) — Use not allowed in zone

USE	**PERMIT REQUIRED BY ZONE**					
	AG & PA 20+ Acres	**PA** 10 -19.9 Acres; In Ag District	**PA** 10 - 19.9 Acres; Out of Ag District	**RE-10 & RL** 10+ Acres; In Ag District	**RE-10 & RL** 10+ Acres; Out of Ag District	**LA** 10+ Acres
Winery						
Production Facilities	P	P	P	P	P	P
Full Service Facilities	P	P	MUP	MUP	CUP	CUP
Wholesale/Retail Sale of Wine	P	P	MUP	MUP	CUP	CUP
Art/merchandise Sales	P	P	P	A	CUP	MUP
Campground						
Temporary	TUP	TUP	TUP	TUP	TUP	TUP
Permanent	CUP	CUP	CUP	CUP	CUP	CUP
Picnic Areas	P	P	P	P	A	A
Events						
Marketing/Promotional	P	P	A	MUP	CUP	MUP
Special Events	P	P	MUP	MUP	CUP	CUP
Agricultural museums	P	P	A	MUP	CUP	CUP
Commercial Kitchen						
Food preparation, on-site	P	P	A	MUP	CUP	MUP
Catering, off-site	P	P	A	MUP	CUP	MUP
Dining facilities	CUP	CUP	CUP	CUP	CUP	CUP
Distilleries	CUP	CUP	CUP	CUP	CUP	CUP
Lodging						
Agricultural Homestays	See Table 130.40.170.1 (Agricultural Lodging)					
Agricultural & Timber Lodging	See Table 130.40.170.1 (Agricultural Lodging)					
Special Events (in excess of E.3)	TUP/ CUP	TUP/ CUP	TUP/ CUP	TUP/ CUP	TUP/ CUP	TUP/ CUP
Music Festivals & Concerts	TUP/ CUP	TUP/ CUP	TUP/ CUP	TUP/ CUP	TUP/ CUP	TUP/ CUP

E. **Winery Uses:** The following provisions shall apply to all wineries, accessory structures, and accessory uses:

1. **General Winery Provisions.**

a. The primary purpose of the winery shall be to process fruit grown on the winery lot or on other local agricultural lands. No more than 50 percent of the fruit processed shall be imported from outside El Dorado County.

b. Wineries include those areas of a winery where grapes are crushed, fermented, or pressed; where bulk wine is stored in tanks or barrels; where winery operations such as racking, filtering, blending, or bottling of wines are carried out; and where on-site case goods are stored.

c. Multiple lots under the same ownership are not considered to be a single lot for purposes of this Section.

2. **Tasting Facilities.**

a. **Subordinate to Winery.** Tasting facilities shall be clearly related and subordinate to the primary operation of the bonded winery as a production facility. The primary focus of the tasting facilities shall be the marketing and sale of the wine and grape or fruit products produced, vinted, cellared, or bottled at the winery. Snack foods that are consumed during wine tasting are allowed.

b. **Wine Sales.** Retail sales of wine fruit products shall be limited to those produced, vinted, cellared, or bottled by the winery operator or grown on the winery lot, or custom crushed at another facility for the winery operator, subject to the provisions of an ABC Type 2 Winegrower's license. (The ABC Type 2 Winegrower's license requires that at least 50 percent of the wine sold be produced by the winery).

c. **Marketing.** Tasting facilities include any marketing activities sponsored by a winery facility intended for the promotion and sale of the facility's products. Activities of a marketing event may include, but are not limited to live music, catered food, food prepared on the premises, winemaker dinners, releases, library wines, discounted sales, "bottle-your-own", and similar activities. Live music is subject to Subsection G.8 (Outdoor Amplified Music) below in this Section. Concerts or events sponsored by or for the benefit of an organization other than the winery shall not be allowed as marketing events, but

may be allowed as special events subject to Subsection E.3 (Special Events) below in this Section.

3. **Special Events.** Special events, as defined in Article 8 (Glossary) of this Title, are any events such as charitable events, promotional events, and facility rental events that are not the tasting and marketing activities described in Subsection E.2.c (Tasting Facilities: Marketing) above in this Section;

   a. **Number Allowed.** Special events are limited to a total of 48 days per calendar year. Special events that have less than 50 persons at one time shall not count against the total number of events allowed. Facility rental events are a type of special event where the property owner is compensated for the use of the site and facilities, such as weddings, parties, company picnics, birthdays, reunions, or other social gatherings. Facility rental events are part of the total special events allowed, but are further limited to the following:
      (1) Lots less than 20 acres in size: 12 days per calendar year.
      (2) Lots 20 acres or more in size: 24 days per calendar year.

   b. **Capacity Limitation.** All special events are limited to 250 persons at one time.

   c. **Ranch Marketing.** The number of special events shall not be added to or combined with those allowed by right under Section 130.40.260 (Ranch Marketing) above in this Chapter.

   d. **Temporary Use Permit.** Those special events, such as fundraisers, concerts, or other special functions where the number of attendees will exceed 250 persons at any given time and where such events are held no greater than three times per calendar year and no more than one time per calendar month, may be allowed by Temporary Use Permit in compliance with Section 130.52.060 (Temporary Use Permit) in Article 5 (Planning Permit Processing) of this Title.

4. **Dining Facility.** The dining facility, as defined in Article 8 (Glossary: see "Ranch Marketing, Dining Facility") of this Title, shall be subordinate to the sale of wine. Areas of a winery that are temporarily set up for winemaker dinners are not considered to be part of the dining facility.

5. **Distilleries.** A distillery, as defined in Article 8 (Glossary: see "Distillery") of this Title, shall be bonded through the Alcohol and Tobacco Tax and Trade Bureau and have a current California ABC License. Distilleries are only allowed with a Conditional Use Permit, in compliance with Section 130.51.021 (Conditional Use Permits) in Article 5 (Planning Permit Processing) of this Title, in conjunction with a winery on the same lot. Allowed activities include, but are not limited to, blending, aging, storing,

bottling, and warehousing operations; tasting facilities; wholesale and retail sales; and administrative functions.

6. **Commercial Kitchen.** A commercial kitchen, as defined in Article 8 (Glossary: see "Commercial Kitchen") of this Title, shall be accessory to the winery, tasting room, and any other authorized accessory use.

7. **Museum.** Agriculture-related museums shall be accessory to a winery and tasting room and shall primarily display items from California's agricultural history.

8. **Picnic Areas.** Picnic areas shall be subordinate to the winery and tasting room.

9. **Retail Sales.** Retail sales of merchandise, art, and prepackaged food items shall only be allowed within the tasting facilities and shall not be located in a separate structure. The sale of prepackaged food items shall comply with the California Health and Safety Code and be permitted by Environmental Management. Sale of non-wine merchandise shall be subordinate to the wine sales.

10. **Catering.** As defined in Article 8 (Glossary: see "Catering") of this Title, use of an on-site commercial kitchen for catering off-site events may be allowed by Conditional Use Permit, in compliance with Section 130.51.021 (Conditional Use Permits) in Article 5 (Planning Permit Processing) of this Title, and only when the catering use is found to be subordinate to the winery's wine sales.

F. **Special Provisions.**

1. **Use Compatibility Limitations.** Proposed winery facilities that are not located within an Agricultural District and that have property lines adjacent to a lot with a noncompatible zone designation shall require a Conditional Use Permit in compliance with Section 130.51.021 (Conditional Use Permits) in Article 5 (Planning Permit Processing) of this Title. For purposes of this Subsection, noncompatible shall be RM, R1, R20K, R1A, R2A and R3A. The use compatibility determination will be made prior to issuance of a building permit for a winery building. Subsequent expansion of the facility's structures or uses will require additional use compatibility determinations.

G. **Development Standards.** These standards are the minimum required for all wineries, accessory uses, and structures listed in Subsection E (Winery Uses) above in this Section. Additional requirements may be added through the discretionary permitting process, if applicable.

1. **Commercial Vineyard.** Should the minimum acreage of wine grapes cease to exist or be properly maintained, as determined by the Agricultural Commissioner, the right to operate the winery and all accessory uses shall immediately cease until such time as the required five acres of wine grapes are re-established to the satisfaction of the Agricultural Commissioner. A determination by the Agricultural Commissioner may be appealed to the Ag Commission whose decision shall be final.

2. **Setbacks.** The following minimum setbacks apply to all wineries, tasting facilities, and outdoor use areas, excluding parking lots and picnic areas:

    a. Adjacent to non-residential zones: 50 feet from all property lines.

    b. Adjacent to residential zones: 200 feet from all property lines.

    c. The 200 foot setback in 2.b above in this Section may be reduced to no less than 50 feet by a grant of administrative relief in compliance with Section 130.52.010 (Administrative Permit, Relief, or Waiver) in Article 5 (Planning Permit Processing) of this Title.

3. **Signs.** See Chapter 130.36 (Signs) in Article 3 (Site Planning and Project Design Standards) of this Title.

4. **Parking.** The following parking standards shall apply to wineries, tasting rooms, and accessory uses:

    a. Permanent parking spaces shall be provided for wineries, tasting rooms, and retail sales areas in compliance with Chapter 130.35 (Parking and Loading) in Article 3 (Site Planning and Project Design Standards) of this Title.

    b. Parking surfaces shall be surfaced with a Class 2 aggregate base or equivalent, with appropriate hard-surfacing for designated ADA compliant parking stalls.

    c. Temporary parking for marketing activities and special events may utilize overflow parking areas that are not surfaced. Limitations on the number of guests may be based on availability of off street parking in compliance with Chapter 130.35 (Parking and Loading) in Article 3 (Site Planning and Project Design Standards) of this Title. All temporary parking shall be accommodated on-site and shall meet any fire district requirements.

5. **Access Standards.** Access standards shall be as follows:

   a. Direct access from a non-county maintained road, regardless of whether the road is located on or off-site, shall require the following:
      (1) **In an Agricultural District.** An Administrative Permit in compliance with Section 130.52.010 (Administrative Permit, Relief, or Waiver) in Article 5 (Planning Permit Processing) of this Title, following a recommendation by the Ag Commission.
      (2) **Not in an Agricultural District.** A Conditional Use Permit in compliance with Section 130.52.021 (Conditional Use Permits) in Article 5 (Planning Permit Processing) of this Title.

   b. **Road Maintenance.** The winery owner will be required to participate in a private road maintenance entity, annex into a road zone of benefit (ZOB), or otherwise pay a fair share for road maintenance as determined by the review authority.

   c. **Fire Safe/Code Standards.** Access to a winery open to the public shall meet the minimum access requirements of the applicable fire district, including both on-site and off-site access roads. Exceptions to these standards may be allowed by the fire district, subject to the appeal processes identified in the SRA Fire Safe Regulations.

   d. **Facilities Not Open to the Public.** A winery that is not open to the public and does not provide on-site sales may be accessed by a non-county maintained road.

6. Size Limitation.

   a. The winery, accessory buildings, and accessory uses shall not occupy more than five acres or 50 percent of the gross lot area, whichever is less.

   b. All new wineries and expansions of existing wineries that exceed 10,000 square feet of floor area and are visible from a County-maintained road shall require a Design Review Permit in compliance with Section 130.52.030 (Design Review Permit) in Article 5 (Planning Permit Processing) of this Title.

   c. Tent structures that exceed 1,200 square feet of floor area and are visible from a County-maintained road shall be limited to a 30 day period, three times per calendar year, unless additional time frames are approved by a Temporary or Conditional Use Permit, in compliance with Section 130.52.060 (Temporary Use Permit) or Section 130.52.021 (Conditional Use Permits) in Article 5 (Planning Permit Processing) of this Title.

d. The total enclosed square footage of all floors of a winery building shall not exceed the square footage shown in the Table 130.40.400.2 (Allowed Square Footage for Winery Buildings) below in this Section. Any winery building or group of winery buildings and accessory buildings exceeding the square footage in Table 130.40.400.2 (Allowed Square Footage for Winery Building) below in this Section shall require a Conditional Use Permit in compliance with Section 130.51.021 (Conditional Use Permits) in Article 5 (Planning Permit Processing) of this Title. Winery buildings do not include residential buildings, garages, outbuildings, and structures not associated with the winery, such as agricultural buildings.

Table 130.40.400.2 – Allowed Square Footage for Winery Buildings

LOT ON WHICH THE WINERY IS LOCATED	MAXIMUM ALLOWABLE WINERY BUILDING SIZE
10 acres to less than 20.0 acres	10,000 square feet
20 acres but less than 40.0 acres	40,000 square feet
40.0 acres and larger	60,000 square feet

7. **Cultural Resource Protection.**

a. Winery development on a lot identified by the County as being listed on the National Register of Historic Places (NRHP) and California Register of Historic Places (CRHR) shall be required to preserve the structure(s). Modifications or demolition of the structures shall only be approved based on recommendations from a cultural resource report that meets County guidelines.

b. Winery development within 100 feet of perennial or intermittent streams shall submit a cultural resource study prior to approval of grading or building permits. Cultural sites identified in the study and recommended for avoidance and protection shall be protected as recommended in the cultural resource study.

8. **Outdoor Amplified Music.** All events featuring outdoor amplified music or amplified speech shall comply with Chapter 130.37 (Noise Standards) in Article 3 (Site Planning and Project Design Standards) of this Title. For any events occurring between 7 p.m. and 10 p.m., a noise analysis shall be submitted to the Department demonstrating that the noise standards will not be exceeded. No outdoor music will be allowed after 10 p.m.

9. **Wine Caves.** The use of subterranean space for winery facilities in natural or manmade caves shall be in compliance with all applicable building and fire codes, and permit requirements.

H. **Micro-Wineries and Small Vineyards.** Wineries that do not meet the minimum acreage requirement for a commercial vineyard, as defined under Subsection C (Definitions) above in this Section, or the minimum lot size under Table 130.40.400.1 (Wineries Allowed Uses Matrix) above in this Section, shall be allowed in compliance with Table 130.40.400.3 (Micro-Winery and Small Vineyards Use Matrix) below in this Section, subject to the following requirements in this Subsection:

Table 130.40.400.3 – Micro-Winery and Small Vineyards Use Matrix

USE	**PA & AG** 10+ Acres; In Ag District	**LA, PA, AG, RL, & RE** 5+ Acres; In/Out of Ag District
Small Vineyard Winery	CUP	—
Micro-Winery	—	CUP

1. **Small Vineyard Winery Standards.** Wineries with a minimum of one to less than five acres of a planted wine-making crop (wine grapes or other fruit) shall be allowed in compliance with the following provisions and Subsection H.3 (General Standards) below in this Section:

   a. The only accessory use allowed shall be a distillery; and

   b. At least 75 percent of the fruit used by the facility shall be grown within El Dorado County.

2. **Micro-Winery Standards.** Micro-wineries shall be allowed in compliance with the following provisions and Subsection H.3 (General Standards) below in this Section:

   a. All micro-wineries shall have a minimum of one acre of planted wine grapes on the same lot;

   b. The capacity of the micro-winery shall not exceed 250 cases (595 gallons) for each acre of wine grapes grown on the lot, with a total capacity not to exceed 1,250 cases (2,972 gallons). Lots zoned PA may exceed these amounts in compliance with the Conditional Use Permit if:
      (1) The lot is within an Agricultural District; and
      (2) The Ag Commission finds that the land is not capable of supporting five acres of vineyard and potential on-site

agricultural land is not being precluded from future agricultural production;

c. No other accessory uses described in this Section are allowed on the site;

d. On-site signs are limited to one, single-faced, non-illuminated sign advertising the name of the winery and owner, and stating "Not Open to the Public". The sign face shall measure a maximum of six square feet in area and shall stand no higher than six feet from natural grade, as measured directly below the sign; and

e. The total enclosed floor area(s) of the micro-winery shall measure no greater than 2,000 square feet.

3. **General Standards.** The following standards shall apply to both small vineyard wineries and micro-wineries:

a. One acre shall mean a planting of wine grapes spanning an area of at least 43,560 square feet and consisting of a minimum of 440 grape vines;

b. The wine grapes or fruit crop shall be properly maintained and cared for to produce a commercial crop. Should the proper maintenance and care of the required minimum acreage cease, as determined by the Agricultural Commissioner, the right to operate the winery becomes void;

c. Wine sales shall be conducted off-site or by internet, mail order, telephone, facsimile, or similar means, only. No on-site sales, tasting, or public access shall be allowed either directly or by appointment;

d. Compliance with all applicable local, State, and federal laws shall be verified prior to operation. At a minimum, the following shall be required:

(1) Fire district review of the facility for consistency with the fire code;
(2) Waste Discharge Permit or Waiver of Discharge Permit from Regional Water Quality Control Board;
(3) Winegrower license from the ABC;
(4) Bonding through the Alcohol and Tobacco Tax and Trade Bureau; and
(5) Building permit, subject to review and approval of the Planning and Building and Environmental Management Departments.

I. **Uses Requiring an Administrative Permit or a Minor Use Permit.** Uses allowed by Administrative Permit or Minor Use permit as shown in Table 130.40.400.1 (Wineries Allowed Uses Matrix) shall comply with Section 130.52 (Permit Requirements, Procedures, Decisions, and Appeals) in Article 5 (Planning Permit Processing) of this Title and the following:

1. The use is incidental and accessory to the winery;

2. A commercial kitchen established for a winery may be used for preparation of food served on-site or off-site or may be leased as a catering facility under an administrative permit. The administrative permit shall verify that all approvals from applicable agencies including, but not limited to El Dorado County Environmental Management Department, California Department of Public Health, and California Department of Food and Agriculture have been obtained.

THIS PAGE INTENTIONALLY LEFT BLANK

ARTICLE 5 – PLANNING PERMIT PROCESSING

CHAPTER 130.50 – APPLICATION FILING AND PROCESSING

Sections:

130.50.010 Content
130.50.020 Organization of Review Process
130.50.030 Review Authority for Allowed Uses and Permit Decisions
130.50.040 General Review Procedures

CHAPTER 130.51 – GENERAL APPLICATION PROCEDURES

Sections:

130.51.010 Content
130.51.020 Application Forms, Submittal Process, and Fees
130.51.030 Environmental Review
130.51.040 Staff Report and Recommendations
130.51.050 Public Notice
130.51.060 Conditions of Approval
130.51.070 Conditions of Automatic Approvals
130.51.080 Post-Decision Notice
130.51.090 Pre-application/Conceptual Review

CHAPTER 130.52 – PERMIT REQUIREMENTS, PROCEDURES, DECISIONS, AND APPEALS

Sections:

130.52.010 Administrative Permit, Relief, or Waiver
130.52.020 Minor Use Permits
130.52.021 Conditional Use Permits
130.52.030 Design Review Permit
130.52.040 Development Plan Permit
130.52.050 Temporary Mobile Home Permit
130.52.060 Temporary Use Permit
130.52.070 Variance
130.52.080 Requests for Reasonable Accommodation
130.52.090 Appeals

CHAPTER 130.54 – PERMIT IMPLEMENTATION, TIME LIMITS, AND EXTENSIONS

Sections:

130.54.010 Content
130.54.020 Effective Date of Permit Approvals

130.54.030 Applications Deemed Automatically Approved
130.54.040 Permits to Run with the Land
130.54.050 Performance Guarantees
130.54.060 Time Limits, Extensions, and Permit Expiration
130.54.070 Revisions to an Approved Permit or Authorization
130.54.080 Re-submittals
130.54.090 Revocation or County Mandated Modification of a Permit

CHAPTER 130.56 – SPECIFIC PLANS

Sections:

130.56.010 Content
130.56.020 Approval Authority
130.56.030 Findings Required
130.56.040 Contents of Specific Plan
130.56.050 Conformance to Specific Plan Required
130.56.060 Amendments

CHAPTER 130.58 – DEVELOPMENT AGREEMENTS

Sections:

130.58.010 Content; Assurances to Applicant
130.58.020 Limitation
130.58.030 Review Authority
130.58.040 Findings Required
130.58.050 Form of Agreement
130.58.060 Amendment, Cancellation, or Assignment
130.58.070 Recordation
130.58.080 Periodic Review
130.58.090 Rules, Regulations, and Official Policies

CHAPTER 130.50 – APPLICATION FILING AND PROCESSING

Sections:

130.50.010 Content
130.50.020 Organization of Review Process
130.50.030 Review Authority for Allowed Uses and Permit Decisions
130.50.040 General Review Procedures

130.50.010 Content

This Article provides the general authority and identifies procedures necessary to file and process development proposals in any zone.

130.50.020 Organization of Review Process

A. **Types of Procedures.** The three procedures used to review all types of applications under this Article, as described in Section 130.50.040 (General Review Procedures) below in this Chapter, are the following:

1. Staff-level review without notice;

2. Staff-level review with notice; or

3. Public hearing.

130.50.030 Review Authority for Allowed Uses and Permit Decisions

The review authority of original jurisdiction for each type of application or use entitlement shall be as provided below in Table 130.50.030.A (Review Authority) below in this Section. The nature of the initial action (i.e. issue, decide, or recommend) is shown, in compliance with Chapter 130.52 (Permit Requirements, Procedures, Decisions, and Appeals) below in this Article.

Table 130.50.030.A – Review Authority

Type of Application	Citation	Director	Zoning Administrator	Planning Commission	Board of Supervisors
Administrative Permit	**130.52.010**	**Issue[4]**	**–**	**Appeal**	**Appeal**
Minor Use Permit	**130.52.020**	**Recommend[1]**	**Decide**	**Appeal**	**Appeal**
Conditional Use Permit	**130.52.021**	**Reccommend[1]**	**Decide[2]**	**Decide**	**Appeal**
Design Review Permit	**130.52.030**	**Decide / Recommend**	**–**	**Decide**	**Appeal**
Development Agreement	**130.58.030**	**–**	**–**	**Recommend**	**Decide**
Development Plan Permit	**130.52.040**	**Recommend**	**–**	**Decide**	**Appeal**
Revisions to an Approved Permit or Authorization[3]	**130.54.070**	**Decide**	**Decide**	**Decide / Appeal**	**Appeal**
Specific Plan	**130.56.020**	**–**	**–**	**Recommend**	**Decide**
Temporary Mobile Home Permit	**130.52.050**	**Issue**	**–**	**Appeal**	**Appeal**
Temporary Use Permit	**130.52.060**	**Decide**	**–**	**Appeal**	**Appeal**
Variance	**130.52.070**	**–**	**Decide**	**Appeal**	**Appeal**

NOTES:

[1] The review authority will consider a discretionary application and make a recommendation for decision to a higher review authority.

[2] Where two deciding review authorities are indicated, such as for Conditional Use Permits, the review authority of original jurisdiction will be determined by the complexity of the project.

[3] Revisions to an approved project shall be decided by the review authority of original jurisdiction.

[4] Administrative relief and waivers of agricultural setbacks beyond the scope of the Director's authority are referred to the Ag Commission for consideration and approval. The Ag Commission decision may be appealed to the Board.

A. An applicant may waive their option for a decision by the Director or Zoning Administrator and be heard directly by the Commission.

B. The Director may defer action and refer any permit or authorization application to the Commission for determination.

C. All decisions of the review authority are appealable, in compliance with Section 130.52.90 (Appeals) below in this Article.

130.50.040 General Review Procedures

The review procedures for the various types of planning applications will be subject to one of the following procedures:

A. **Staff-level Review without Public Notice.** Staff shall render decisions based upon standards that have been adopted by the County as law or as policy without the requirement of notice to surrounding property owners and other parties.

B. **Staff-level Review with Public Notice.** Staff shall provide written or published notice to affected and interested parties regarding specific findings or conditions prior to a decision. The notice shall be designed to ensure that ~~all~~ interested parties are aware of the pending decision and are given a chance to comment before staff renders a decision and provides notice of the appeal procedure.

C. **Public Hearing.** A public hearing may be conducted before the Board, the Commission, or the Zoning Administrator. During the course of the public hearing, the applicable review authority shall invite public testimony for and against the use proposal, review evidence, and then render its decision in compliance with Section 130.51.060 (Conditions of Approval) below in this Article.

THIS PAGE INTENTIONALLY LEFT BLANK

CHAPTER 130.51 – GENERAL APPLICATION PROCEDURES

Sections:

130.51.010 Content
130.51.020 Application Forms, Submittal Process, and Fees
130.51.030 Environmental Review
130.51.040 Staff Report and Recommendations
130.51.050 Public Notice
130.51.060 Conditions of Approval
130.51.070 Conditions of Automatic Approvals
130.51.080 Post-Decision Notice
130.51.090 Pre-application/Conceptual Review

130.51.010 Content

This Chapter establishes the application requirements and noticing provisions necessary to process land use and development proposals in any zone.

130.51.020 Application Forms, Submittal Process, and Fees

An application for an allowed use decision or permit required by this Title shall be submitted on an application form provided by the Department and shall include the written consent of the lawful owner or owners of record. Each allowed use application and information packet shall include a list of the information and materials necessary to render the requested allowed use decision. Each application shall be accompanied by the required information and materials before the application is deemed complete and accepted for filing. Any application made under the provisions of this Title may be initiated by the Board or by an applicant identified in A below.

A. A permit application may be filed by:

1. The lawful owner or owners of record of the lot on which the proposed project will be located, or their duly authorized agent.

2. A person with lawful power of attorney or other acceptable authority from the lawful owner of record. Evidence of authorization shall be submitted with the application.

B. When more than one land use decision is required for a single project, all applications may be filed concurrently. The review authority shall act on the different parts of a combined application on their own merits, and may approve one application without approving the other or others.

C. Approvals granted for an application that was submitted containing a material misrepresentation or omission of material facts known to the applicant may result in revocation or unilateral modification of conditions of a permit or approval by the County, as provided in Section 130.54.090 (Revocation or County Mandated Modification of a Permit) below in this Article.

D. Applications for permits or authorizations required by this Title shall be filed with the Department. All applications shall meet the following requirements:

1. The proposed use is allowed, or has been found to be similar and compatible with allowed uses, within the zone in which it is located;

2. The proposed use meets all applicable standards and requirements of this Title or such standards that are the subject of a concurrently filed Variance application; and

3. No violation of the County Code or any condition of approval of an applicable use entitlement exists on the subject site, unless the purpose of the application is to bring the violation into compliance.

E. **Application Fees.** Application fees adopted by resolution of the Board shall be paid upon application submittal. Additional fees may be required subject to the provisions of the adopted fee schedule, such as for "time and material" fee categories. Policies for collection of fees, refunds, and handling overdue accounts while processing applications shall be determined by the Director.

F. **Review of Applications.** Within 30 days of the filing of an application, the Department shall review it for completeness and accuracy before the application is accepted as being complete and officially filed. The applicant shall be notified in writing by the Department that either:

1. The application has been determined to be complete and accepted for processing; or

2. The application is incomplete and additional information, specified in writing, must be provided. If an application is determined to be incomplete, the time in which the application must be processed shall be stayed until such time as the applicant has provided the required information.

   If the Department fails to notify the applicant in writing within 30 days of filling, the application shall be deemed complete. The Department may request additional information where needed to comply with the California Environmental Quality Act (CEQA).

G. **Expiration of Application.** The application shall expire and be deemed withdrawn, requiring processing to stop and the filing of a new application for project consideration, if:

1. An application has been determined to be incomplete and the required information is not submitted within one year from the date of determination; or

2. An applicant has requested that processing be delayed or stayed for a period of more than one year.

130.51.030 Environmental Review

A. After acceptance of an application in compliance with Subsection 130.51.020.F (Review of Applications) above in this Chapter, the Department shall review the proposed project in compliance with the *CEQA Statutes and Guidelines* (California Public Resources Code 21050 et seq.) and any county CEQA implementation resolutions, as may be amended from time to time. Unless the Department determines that the proposed project is not a "project" as defined by CEQA, and that the project is not exempt from the requirements of CEQA, the Department shall prepare the appropriate CEQA document concurrently with the processing of the application(s).

B. The Department may require the applicant to submit additional information, reports, or analyses that may be needed for the environmental review of the project.

C. When a determination is made to prepare an Environmental Impact Report (EIR) in compliance with CEQA, the Commission may, when necessary, separately consider the Director's decision to require the preparation of an EIR prior to its preparation.

D. Before taking an action to approve an allowed use application that is subject to CEQA, the review authority shall consider and certify the applicable the CEQA document, including appropriate findings.

130.51.040 Staff Report and Recommendations

When an application requires action by a review authority at a public hearing, the Department shall prepare a report and make a recommendation on the project. The procedure for preparing said report shall be as follows:

A. Application information shall be distributed to appropriate County departments, local, state, and federal agencies, interested organizations and individuals, and any other party whom the Department finds could provide relevant comments on the potential effects of the project.

B. The Department may perform an on-site inspection of the project site before confirming that the request complies with all of the applicable criteria and provisions identified in this Title.

C. Upon receipt of comments after distribution, the Technical Advisory Committee (TAC) shall conduct a meeting as set forth in Section 130.60.060 (Technical Advisory Committee) in Article 6 (Zoning Ordinance Administration) of this Title, unless staff determines no TAC meeting is necessary. The applicant is encouraged to attend the TAC meeting.

D. After the meeting, or where staff determines no TAC meeting is necessary, the Department shall review the application and prepare a report to the applicable review authority on whether the proposed project should be approved, conditionally approved, or denied. The staff report shall include the recommendations of state and local agencies, and other County departments, and shall include an analysis of the proposed project and its compliance with this Title, the General Plan, adopted design standards, and any other applicable provisions of the County Code or State law.

E. The staff report shall be distributed to the applicant and made available to the public within the time frames established by state law, as may be amended from time to time.

130.51.050 Public Notice

See existing Title 130 (Zoning Ordinance) for the following sections which were amended on September 15, 2015 (Board adopted OR14-001):

Sec. 130.04.015 – Notice requirements and procedure
Sec. 130.10.020 – Commission hearing
Sec. 130.10.040 – Board hearing
Sec. 130.22.200 – Notice of hearings

130.51.060 Conditions of Approval

In approving an application for a permit or authorization, the review authority may establish reasonable conditions to its approval that are found to be necessary to mitigate impacts created by the proposed project, that are consistent with the General Plan, Zoning Ordinance, and other applicable laws, ordinances, standards, or regulations, and that protect the public health, safety, and welfare.

A. Conditions of approval may be revised in compliance with Chapter 130.54.070 (Revisions to an Approved Permit or Authorization).

B. The violation of any required condition shall constitute a violation of this Section and may constitute grounds for revocation of the permit or authorization in compliance with Section 130.54.090 (Revocation or County Mandated Modification of a Permit) below in this Article.

C. The review authority may require recordation of the conditions of approval for Design Review, Variance, Conditional/Minor Use, and Development Plan permits.

130.51.070 Conditions of Automatic Approvals

A. In the event the County fails to act on a development project, as defined in California Government Code (GC) Section 65928, within the time limits set forth in GC Section 65920 et seq., the development project shall be deemed approved provided the project meets all of the following:

1. Public notice is provided by the applicant in compliance with GC Section 65956(b).

2. The proposed use in the development project is an allowed use in the applicable zone.

3. The development project is consistent with General Plan policies, any applicable specific plan requirements, and development standards and other provisions in this Title.

4. The development project complies with the adopted standards of the Department of Transportation, Environmental Management Department, Planning and Building Department, the responsible fire department, and any other state or local agency necessary to protect the public health, safety, and welfare.

B. Any automatic approval of a development project shall become null and void unless all conditions imposed by this Section have been fully complied with and the occupancy, use of the land, and use of the proposed or existing structure(s) authorized by the automatic approval has taken place within 24 months after the date of the automatic approval.

130.51.080 Post-Decision Notice

A. Within 10 days of a final decision on an application for an allowed use decision or permit required by this Article, the County shall provide notice of its final action to the applicant and to any person(s) who specifically requested notice of the County's final action and has provided a self-addressed stamped envelope.

B. The notice shall contain the final decision by the review authority, any conditions that may have been imposed, and the findings made to support the decision.

130.51.090 Pre-application/Conceptual Review

A. This process provides for a pre-application or conceptual review prior to the submittal of development applications to:

1. Review preliminary project design to ensure compliance with County policy and ordinances;

2. Provide early identification of possible issues, giving the applicant the opportunity to seek solutions or consider design alternatives before formal filing of an application;

3. Suggest alternatives for the project;

4. Assist the applicant in determining the scope of materials required for submittal of an application, especially those which are complex or involve multiple applications; and

5. Improve the quality of the application when submitted, thereby simplifying its processing.

B. **Application.** The applicant must submit an application to the Department requesting either a pre-application meeting with staff or a conceptual review hearing before the Commission or the Board.

C. **Information Provided.** Contents of the application at the time of submittal shall be any available information that will assist staff, Commission members, or the Board in reviewing the proposed project in a timely manner. Required and suggested information shall be listed on the application form, as may be amended from time to time.

D. When the complexities of an allowed use or permit application warrants, the Department or the applicable review authority may recommend that the applicant submit materials and attend necessary conferences or hearings to conduct, in an informal workshop setting, a preliminary review of the development proposal.

CHAPTER 130.52 – PERMIT REQUIREMENTS, PROCEDURES, DECISIONS, AND APPEALS

Sections:

130.52.010 Administrative Permit, Relief, or Waiver
130.52.020 Minor Use Permits
130.52.021 Conditional Use Permits
130.52.030 Design Review Permit
130.52.040 Development Plan Permit
130.52.050 Temporary Mobile Home Permit
130.52.060 Temporary Use Permit
130.52.070 Variance
130.52.080 Requests for Reasonable Accommodation
130.52.090 Appeals

130.52.010 Administrative Permit, Relief, or Waiver

An Administrative Permit is required in cases where limited review of a proposed structure or use through the site plan review process is necessary to verify compliance with established standards adopted to ensure compatibility with adjacent uses and availability of public services and infrastructure. The Administrative Permit shall also be used for the processing of administrative relief or waiver requests in compliance with Subsection B (Administrative Relief of Waiver) below in this Section or to establish the legal nonconforming status of a use or structure in compliance with Chapter 130.61 (Nonconforming Uses, Structures, and Lots) in Article 6 (Zoning Ordinance Administration) of this Title.

The issuance of an Administrative Permit shall be a ministerial project pursuant to CEQA.

A. **Administrative Permit.**

1. **Review Authority and Procedure.** The Director shall be the review authority of original jurisdiction for Administrative Permits. The procedure shall be staff-level without public notice, except where Specific Use Regulations in Article 4 (Specific Use Regulations) of this Title provide for public notice.

2. **Standards for Approval.** An Administrative Permit shall comply with the following standards:

   a. The structure(s) or use(s) are in compliance with the applicable zone provisions, standards or requirements of this Title, any applicable specific plans, or any other regulations adopted by the County through ordinance or resolution; and

b. The structure(s) and use(s) are in compliance with requirements and conditions of previously approved entitlements, such as Minor and Conditional Use Permits, or variances, if applicable.

B. **Administrative Relief or Waiver.**

1. **Review Authority and Procedure**. The Director shall be the review authority of original jurisdiction. The procedure shall be staff-level with public notice as described below. The Director may grant administrative relief or waiver from the standards set forth in this Title of up to the limits set forth in the applicable sections, or 10 percent of the area or dimension, whichever is greater, subject to the following procedures:

   a. After submittal of a complete application, the Department shall notify all adjacent property owners by mail of the proposed request;

   b. A period of ten working days shall be provided to the adjacent property owners to comment on the proposed request;

   c. If an objection is received during the comment period, the Director shall not approve the proposed request, and elevate the review to the Zoning Administrator or Commission;

2. Administrative relief or waiver requests may be approved if in compliance with the following standards:

   a. The proposed reduction does not exceed the limits set forth in this Chapter;

   b. There are no objections from any adjacent property owner; and

   c. The proposed relief will not be detrimental to the public health, safety, and welfare, or injurious to the neighborhood;

3. A Variance application shall be required for consideration of a reduction in development standards if any of the standards for administrative relief or waiver set forth in Subsection B.2, above in this Section, cannot be met.

4. Administrative relief and waivers of agricultural setbacks beyond the scope of the Director's authority are referred to the Ag Commission for consideration and approval. The Ag Commission decision may be appealed to the Board.

130.52.020 Minor Use Permits

A. **Applicability.**

1. **Minor Use Permit.** A Minor Use Permit is a process for reviewing uses and activities that are typically compatible with other allowed uses within a zone, but due to their nature require consideration of site design and adjacent uses. Minor Use Permits provide for a discretionary review of minor projects or uses that are allowed, but do not meet the standards for administrative review. Unless the Department makes the following determination, the project will be processed as a Conditional Use Permit in compliance with Section 130.52.021 (Conditional Use Permits) below in this Chapter:

   a. The project incorporates standards or conditions that are capable of mitigating potentially significant environmental impacts to a level less than significant or determined to be exempt from CEQA.

B. **Review Authority and CEQA.**

1. **Minor Use Permit.** The Zoning Administrator shall have review authority of original jurisdiction for a Minor Use Permit. The approval of a Minor Use Permit is a discretionary project pursuant to CEQA, and public notice and hearing is required.

C. **Specific Findings for Minor Use Permits.** In addition to findings of consistency with the requirements and standards of this Title, the review authority shall make the following findings before approving a Minor Use Permit application:

1. The proposed use is consistent with the General Plan;

2. The proposed use would not be detrimental to the public health, safety and welfare, or injurious to the neighborhood; and

3. The proposed use is specifically allowed by a minor use permit pursuant to this Title.

130.52.021 Conditional Use Permits

A. **Applicability.**

1. **Conditional Use Permit.** A Conditional Use Permit is a process for reviewing uses and activities that may be appropriate in the applicable zone but the potential for effects on the site and surroundings cannot be determined without a site specific review.

B. **Review Authority and CEQA.**

1. **Conditional Use Permit.** The Zoning Administrator or the Commission shall have review authority of original jurisdiction for Conditional Use Permit applications. The determination of the review authority shall be made by the Director based on the nature of the application, and the policy issues raised by the project. The approval of a Conditional Use Permit is a discretionary project and is subject to the requirements and procedures of CEQA.

C. **Specific Findings for Conditional Use Permits.** In addition to findings of consistency with the requirements and standards of this Title, the review authority shall make the following findings before approving a Conditional Use Permit application:

1. The proposed use is consistent with the General Plan; and

2. The proposed use would not be detrimental to the public health, safety and welfare, or injurious to the neighborhood; and

3. The proposed use is specifically allowed by a conditional use permit pursuant to this Title.

D. If there is any single use that triggers the need for a Conditional Use Permit, the Conditional Use Permit will include and address, as long as it remains active, all existing and subsequent uses allowed by discretionary permit.

130.52.030 Design Review Permit

A. **Applicability.** The Design Review Permit process is established in specific areas of the County to ensure compatibility with historical, scenic, or community design criteria. This process is applied only to commercial, industrial, mixed-use, and multi-unit residential projects in the following areas:

1. Meyers Area Plan.

2. Land adjacent to designated State Scenic Highway Corridors.

3. Other areas where the Design Review-Community (-DC), -Historic (-DH), or Scenic Corridor (-DS) Combining Zones have been applied.

4. Mixed use development projects in Community Regions.

B. **Review Authority, Procedure, and CEQA.** The Director shall have the review authority of original jurisdiction for those projects not adjacent to or visible from designated state scenic highway corridors. The procedure shall be staff-level with

public notice. The Commission shall have the review authority of original jurisdiction for those projects that are adjacent to or visible from designated state scenic highway corridors. The adoption of Design Standards in accordance with Subsection 130.27.050.F (Establishment of Community Design Review Areas; Guidelines and Standards) in Article 2 (Zones, Allowed Uses, and Zoning Standards) of this Title, is a discretionary project pursuant to CEQA. The approval of a Design Review Permit is a ministerial project pursuant to CEQA, when in compliance with adopted Design Standards. The Design Review process shall be limited to consideration of compliance with established standards, provided that the use proposed for the project site is an allowed use within the zone.

C. **Design Review Committee.** If a project is located within a district for which a design review committee has been established in compliance with Section 130.60.070 (Design Review Committee) in Article 6 (Zoning Ordinance Administration) of this Title, the Director shall transmit the application to the committee prior to rendering a written decision or making a recommendation to the Commission. The application review process by the committee shall provide an opportunity for the applicant or other interested persons to provide testimony. After public testimony, the committee shall discuss the proposed project and by motion present a recommendation to the Director. The Director may approve or deny the permit, and may incorporate conditions to ensure compliance with the applicable design standards.

130.52.040 Development Plan Permit

A. **Process.** This Section describes the Development Plan Permit, process which provides flexibility from the strict application of the Ordinance standards to allow for proposed developments to utilize innovative site planning techniques and other effective design responses to site features, uses on adjacent properties, and environmental constraints.

B. **Applicability.** A Development Plan Permit application shall be filed and processed in conformance with Chapter 130.28 (Planned Development (-PD) Combining Zone) in Article 2 (Zones, Allowed Uses, and Zoning Standards) of this Title.

C. **Review Authority and CEQA.** The Commission shall have the review authority of original jurisdiction for a Development Plan Permit application. The approval of a Development Plan Permit is a discretionary project pursuant to CEQA.

D. **Scope of Approval.** When determined by the review authority to be appropriate, Development Plan Permit approval may allow:

1. Variations in zone development standards contained in this Title, or design standards contained in the Design and Improvement Standards Manual (DISM)/Land Development Manual (LDM), or successor document, such as

setbacks, lot size, lot width, floor area ratio (FAR), and height limits for greater flexibility in project design;

2. Establishment of project specific design guidelines to be applied consistently throughout the development, including but not limited to architectural standards and review processes, landscape standards, maintenance agreements, sign programs, and CC&Rs.

E. **Findings for Development Plan Permits.** When approving a request for a Development Plan Permit, the review authority must make the following findings:

1. The proposed development plan is consistent with the General Plan, any applicable specific plan, and Chapter 130.28 (Planned Development (-PD) Combining Zone) in Article 2 (Zones, Allowed Uses, and Zoning Standards) of this Title;

2. The site is adequate in shape and size to accommodate proposed uses and other required features;

3. That any exceptions to the development standards of the zone are justified by the design or existing topography;

4. Adequate public services and facilities exist or will be provided to serve the proposed development including, but not limited to, water supply, sewage disposal, roads, and utilities;

5. If mixed-use development is being proposed, the development conforms to the standards in Section 130.40.180 (Mixed Use Development) in Article 4 (Specific Use Regulations) of this Title;

6. The proposed development complies with the provisions of the –PD Combining Zone Section 130.28.010 (Planned Development (-PD) Combining Zone Established) in Article 2 (Zones, Allowed Uses, and Zoning Standards) of this Title.

F. **Concurrent Applications.** A project that is also subject to a Conditional Use Permit or Design Review Permit, or tentative subdivision or parcel map, shall have such application(s) processed concurrently with the Development Plan Permit. The findings for each permit shall be made separately and combined under the authority of the Development Plan Permit. In addition, the following shall apply:

1. A separate Design Review Permit application shall not be required with a Development Plan Permit; however, the proposed development plan shall require review by the applicable design review committee, as provided in Section 130.52.030 (Design Review Permit) above in this Chapter.

2. If a subdivision of land is proposed in conjunction with a project that requires a Development Plan Permit, a tentative map application and rezone application to add the –PD combining zone, if not already zoned as such, are also required. In the event a tentative map application is concurrently approved with a Development Plan Permit application, expiration of the Development Plan Permit shall occur at such time that the tentative map expires and shall be extended as a part of any map extension authorized by Title 120 (Subdivisions) and/or the provisions of the California Government Code.

G. **Time Limits and Expiration.** The time limit and expiration of Development Plan Permit applications shall be in compliance with Section 130.54.060 (Time Limits, Extensions, and Permit Expiration) below in this Article. The expiration of a Development Plan Permit related to a tentative subdivision or parcel map shall have the same expiration date as the tentative map. Extensions of the tentative map shall automatically extend the Development Plan Permit.

H. **Revisions to an Approved Permit.** Any requested change to the Development Plan Permit shall be in compliance with Section 130.54.070 (Revisions to an Approved Permit or Authorization) below in this Article.

130.52.050 Temporary Mobile Home Permit

A. **Content.** This Section provides standards for the location, occupation, and removal of temporary housing under a Temporary Mobile Home Permit. The standards allow residents to provide adequate housing on a temporary basis for adult family members who are dependent for financial or health reasons or for the use by a caretaker/watchman in commercial, industrial and recreational zones, and to ensure the removal of the unit upon cessation of the housing need.

B. **Applicability.** This Section shall apply to housing as a temporary accessory use to either a primary dwelling or to specified non-residential uses, as allowed in the use matrices for the zones, subject to the following purposes:

1. One mobile home or recreational vehicle for the purpose of habitation during the construction of a permitted primary dwelling or during major repair of a damaged dwelling that is uninhabitable, consistent with Subsection 130.40.190.B.2 (Temporary Mobile Home While Constructing) in Article 4 (Specific Use Regulations) of this Title; or

2. Temporary hardship use consistent with Subsection 130.40.190.B.3 (Mobile/ Manufactured Homes – Hardship Purposes) in Article 4 (Specific Use Regulations) of this Title:

a. Use by the owner or members of the household to provide temporary housing or shelter for household members and/or to allow for in-home care of household members; or

b. Use by a caretaker where the purpose of the caretaker is to assist elderly or disabled homeowner(s) with their personal care and/or the care and protection of their property. In this instance, "elderly" shall mean a person 62 years of age or older.

3. Contractor's offices, consistent with Subsection.B.4 (Temporary Contractor's Office) in Article 4 (Specific Use Regulations) of this Title, when allowed in the base zone;

4. Agricultural or construction employee housing consistent with Subsections 130.40.190.B.5 (Construction Employee Housing) and 130.40.190.B.6 (Agricultural Employee Housing) in Article 4 (Specific Use Regulations) of this Title;

5. In commercial and industrial zones, as well as for public and private schools and churches, one mobile home or recreational vehicle placed for the purpose of providing temporary housing for caretakers or watchmen in compliance with Section 130.40.120 (Commercial Caretaker and Agricultural Employee Housing) in Article 4 (Specific Use Regulations) of this Title. Findings of necessity shall be based on, but not limited to, the following factors:

a. Value and portability of goods and/or equipment stored on the property;

b. Sheriff's records demonstrating significant exposure to vandalism or the loss of goods and/or equipment;

c. Precautionary measures taken by the applicant to prevent loss or vandalism; and

d. Practicality of permanent facilities.

C. **Review Authority, Procedure, and CEQA.** The Director shall have the review authority of original jurisdiction for a Temporary Mobile Home Permit application. The review procedure shall be staff-level without public notice. The approval of a Temporary Mobile Home Permit is considered a ministerial project pursuant to CEQA.

D. **Temporary Mobile Home Permit Requirements.**

1. One temporary housing unit may be granted on a lot or contiguous lots under common ownership.

2. The property owner shall occupy a dwelling on the site for the uses allowed under Subsections B.1 and B.2 (Applicability) above in this Section.

3. The applicant shall comply with all development standards for the zone and any other statutes and ordinances relating to building, fire, and health codes.

4. The applicant shall sign and notarize an agreement that at the conclusion of the permit or the violation thereof, the temporary housing unit shall be removed from the property. In the event the property owner fails to remove the unit, the County may be authorized to remove the housing unit and record a lien on the property for the cost of removal. Such agreement shall be recorded by the County.

E. **Permit Expiration.** The Temporary Mobile Home Permit shall be approved for a period not to exceed 24 months and may be renewed for additional 24 month periods subject to the provisions of this Section. Proof of continuing eligibility is required as a condition of renewal. A Temporary Mobile Home Permit shall expire if the temporary housing unit is removed from the property or if it is no longer occupied by a qualifying occupant for a period of 60 days. At the end of the 60 day period, the property owner shall have 30 days to remove the temporary housing unit from the property in compliance with Subsection 130.40.190.C (Temporary Mobile Home Removal) in Article 4 (Specific Use Regulations) of this Title.

F. **Development Standards.**

1. The following types of structures shall be allowed for use as temporary housing units and shall be erected, constructed, or installed in a manner that effects easy removal:

   a. Units constructed to meet building codes, including panelized structures or other structural types that may be affixed to a foundation but disassembled at a later date;

   b. Units constructed to meet the standards of the *National Manufactured Home Construction and Safety Standards Act of 1974*, as amended from time to time; or

   c. Recreational vehicles for the purpose of temporary housing under Subsection B.3 (Applicability) above in this Section;

2. **Minimum Parcel Size.** A temporary housing unit shall be allowed on any parcel zoned for single-unit residential development; however, temporary housing for the caretaker use allowed under Subsection B.2 (Applicability) above in this Section shall not be allowed on property that is less than one acre in size;

3. **Maximum Unit Size.** A temporary housing unit shall have a maximum floor area of 1,600 square feet, subject to the maximum coverage requirements of the zone;

   a. Floor area shall be measured from the outside of the exterior walls to include all enclosed habitable space, such as living areas, hallways, stairwells, storage areas, and equipment rooms, but shall not include attached garages.

   b. Conversion of the unit to a permanent secondary dwelling will be subject to the maximum floor area limitations for that specific use, as well as all applicable development standards under Subsection 130.40.300.C (Secondary Dwellings) in Article 4 (Specific Use Regulations) of this Title.

4. **Design Standards.** The appearance of a temporary housing unit shall be similar to, or compatible with, the appearance of the primary dwelling; and the unit shall be situated so as to be subordinate to the primary dwelling, as viewed from the adjacent road easement or right-of-way.

5. **Parking.** On-site parking must be provided for the occupants of the temporary housing unit, subject to Chapter 130.35 (Parking and Loading) in Article 3 (Site Planning and Project Design Standards) of this Title.

130.52.060 Temporary Use Permit

A. **Content.** This Section establishes procedures and standards for the granting of Temporary Use Permits to ensure that the establishment, maintenance, and operation of a temporary use, as defined in Article 8 (Glossary: see "Temporary Use") of this Title, is not be detrimental to the public health, safety, and welfare of persons residing or working in the neighborhood of the proposed activity.

B. **Applicability.** The standards in this Section shall apply to temporary uses that are generally not allowed by right in the zone, but that may be allowed because they are of temporary duration. Temporary uses on property under approved development plans shall also be allowed without applying for a Development Plan Permit. Temporary uses may be subject to additional permits, licenses, or inspections as required by any applicable law, code, or regulation.

C. **Exemptions.** The following uses shall be exempt from the requirements contained within this Section providing no outdoor amplified sound systems are used during the course of the activity:

   1. Temporary uses of less than three days duration that are held on County parks or public property and sponsored by bona fide charitable or nonprofit

organizations provided such uses have prior approval from the public agency having responsibility for the property being utilized.

2. Garage sales, yard sales, and similar temporary sales activities on residentially zoned properties that are conducted in compliance with the standards under Subsection 130.40.220.E (Garage Sales) in Article 4 (Specific Use Regulations) of this Title.

3. Mobile homes used temporarily during construction, as a contractor's office, or for construction employee housing in compliance with the standards under Subsections 130.40.190.B.4 (Contractor's Office) and B.5 (Construction Employee Housing) in Article 4 (Specific Use Regulations) of this Title.

4. An event on the site of, or within, a meeting hall, religious facility, school, theater, or other similar facility designed and approved by the County for public assembly.

5. Fundraising car washes on property within a commercial, industrial, or research and development zone, limited to a maximum of two days per month for each sponsoring organization:

   a. Sponsorship shall be limited to educational, fraternal, religious, or service organizations directly engaged in civic or charitable efforts, or to tax exempt organizations in compliance with Section 501(c) of the Federal Revenue and Taxation Code.

   b. Notwithstanding Subsection 5.a in this Section, a fundraising carwash shall be conducted in compliance with applicable stormwater regulations to minimize potential water quality impacts.

6. The use of a site for location filming of commercials, movies, or videos that are allowed subject to a time specified by the Director and the County Film and Media Office.

D. **Review Authority and CEQA.** The Director shall have the review authority of original jurisdiction for a Temporary Use Permit application. The procedure shall be staff-level without public notice. The approval of a Temporary Use Permit is a discretionary project pursuant to CEQA.

E. **Requirements for Approval.** Approval of a Temporary Use Permit shall be subject to the standards under this Title that are applicable to the proposed use(s). Any other standards or requirements adopted by the County through ordinance or resolution shall be applied as well, in particular Section 5.12.050 (Carnivals) and Chapter 5.32 (Outdoor Music Festivals) of Title 5 (Business Taxes, Licenses and Regulations) of the County Code of Ordinances regarding carnivals and outdoor music festivals,

respectively. The Director, in conjunction with the other affected agencies, may also impose such conditions as necessary to ensure compatibility with adjacent uses.

1. The following time limits for these specific temporary uses shall be the maximum allowed in a single calendar year:

   a. **Two 3-day Weekends for a Total of 6 Days**:
      (1) Auctions.
      (2) Concerts.
      (3) Outdoor religious revival meetings.
      (4) Outdoor carnivals, circuses, rodeos, and itinerant shows.
      (5) Youth, charitable, or nonprofit organization projects or events.
      (6) Special Events, temporary (if authorized by the Zone District).

   b. **30 Consecutive Days:**
      (1) Grand opening signs (one time only per use).
      (2) Temporary signs and banners for schools, churches, and non-profit organizations announcing special events, enrollment periods, and similar temporary activities. No more than two such temporary banners may be placed on the same parcel during a calendar year beginning January 1.

   c. **45 Consecutive Days:**
      (1) Seasonal sales.

2. All uses allowed by a Temporary Use Permit shall be terminated no later than the expiration date indicated upon the permit. All materials or products used in connection with or resulting from the temporary use shall be removed and the site restored within five days after the expiration date.

3. Bonds or other acceptable security may be required to guarantee the removal of any materials in connection with or resulting from the temporary use in compliance with Section 130.54.050 (Performance Guarantees) below in this Article. If required, said bonds or acceptable security shall be filed at the time of application submittal, and shall include a nonrefundable processing fee. In particular, vegetable, fruit, or flower stands and Christmas tree lots shall be subject to a bond requirement in an amount set by resolution of the Board.

4. Upon the removal of all materials associated with the temporary use, the applicant shall request an inspection by the Director regarding the release or other disposition of the bond or security deposit.

130.52.070 Variance

A. **Content.** This Section describes the process for County consideration of requests to modify certain standards of this Title (Title 130, Zoning Ordinance) when, because of special circumstances applicable to the property, including location, shape, size, surroundings, topography, or other physical features, the strict application of the development standards for the zone denies the property owner rights enjoyed by other property owners in the vicinity and in the same zone.

B. **Applicability.** A Variance may be granted to modify any development standards as set forth in this Title. A Variance may not be used to authorize a use or activity not otherwise allowed within the zone.

C. **Approving Authority and CEQA.** The Zoning Administrator shall have the review authority of original jurisdiction for a Variance authorization. The approval of a Variance is a discretionary project pursuant to CEQA.

D. **Findings Required.** A Variance shall be granted by the review authority only where all of the following circumstances are found to apply:

1. There are special circumstances or exceptional characteristics or conditions relating to the land, building, or use referred to in the application, which circumstances or conditions do not apply generally to land, buildings, or uses in the vicinity and the same zone;

2. The strict application of the zoning regulations as they apply to the subject property would deprive the subject property of the privileges enjoyed by other property in the vicinity and the same zone (California Government Code Section 65906);

3. A variance granted shall not constitute a grant of special privileges inconsistent with the limitations upon other properties in the vicinity and zone in which such property is situated (California Government Code Section 65906); and

4. The granting of the Variance is compatible with the maps, objectives, policies, programs, and general land uses specified in the General Plan and any applicable specific plan, and not detrimental to the public health, safety, and welfare or injurious to the neighborhood.

E. **Conditions of Approval.** In approving a Variance, the review authority may impose any conditions deemed reasonable and necessary to ensure that the approval will comply with the findings required in Subsection D (Findings Required) above in this Section.

130.52.080 Requests for Reasonable Accommodation

A. **Content.** This Section provides a procedure to request reasonable accommodation for persons with disabilities seeking equal access to housing under the Federal Fair Housing Amendments Act of 1988 and the California Fair Employment and Housing Act (the Acts) in the application of zoning laws and other land use regulations, policies, and procedures.

B. **Applicability.**

1. A request for reasonable accommodation may be made by any person with a disability, or by an entity acting on behalf of a person or persons with disabilities, to provide or secure equal access to housing, when the application of a zoning law or other land use regulation, policy, or practice acts as a barrier to fair housing opportunities. As defined in the Acts, a person with a disability is one having a physical or mental impairment that limits or substantially limits one or more major life activities; anyone who is regarded as having such impairment; or anyone having a record of such impairment. This Section is intended to apply to those persons who are defined as disabled under the Acts.

2. A request for reasonable accommodation may include a modification or exception to the rules, standards and practices for the siting, development, and use of housing or housing-related facilities that would eliminate regulatory barriers and provide a person with a disability with equal opportunity to housing of their choice. Requests for reasonable accommodation shall be made in the manner prescribed by Subsection C (Application Requirements) below in this Section.

C. **Application Requirements.**

1. **Application.** Requests for reasonable accommodation shall be submitted in writing in the form of a letter to the Director, and shall contain the following information:

   a. The name, address, and telephone number of the individual(s) requesting reasonable accommodation (or group of individuals, if application is made by an entity acting on behalf of a person or persons with disabilities);

   b. The street address and assessor's parcel number of the property for which the request is being made;

   c. Name and address of the property owner(s);

d. The current actual use of the property;

e. The basis for the claim that the individual (or group of individuals, if application is made by an entity acting on behalf of a person or persons with disabilities) is considered disabled under the Acts;

f. Description of the requested accommodation and the zoning law, provision, regulation or policy for which reasonable accommodation is being sought and any supporting information, such as site plans;

g. Reason that the requested accommodation may be necessary for the individual(s), or group of individuals, with the disability to have equal opportunity to housing.

2. **Concurrent Review.** If the project for which the request for reasonable accommodation is being made also requires some other discretionary approval, then the applicant may file the request concurrently with the application for discretionary approval.

3. **Request for Reasonable Accommodation.** A request for reasonable accommodation in regulations, policies, practices and procedures may be filed at any time that the accommodation may be necessary to ensure equal access to housing. A reasonable accommodation does not affect an individual's obligations to comply with other applicable regulations not at issue in the requested accommodation.

D. **Review Authority and Procedure.**

1. **Reviewed by the Director.** Requests for reasonable accommodation shall be reviewed by the Director, or his/her designee, if no other discretionary approval is required. The Director or his/her designee shall make a written determination within 45 calendar days of the request and either grant, grant with modifications, or deny a request for reasonable accommodation in accordance with Subsection E (Findings and Conditions of Approval) below in this Section.

2. If necessary to reach a determination on the request for reasonable accommodation, the reviewing authority may request further information from the applicant consistent with fair housing laws, specifying in detail the information that is required. In the event that a request for additional information is made, the 45 day period to issue a decision is stayed until the applicant responds to the request.

3. **Concurrent review authority.** Requests for reasonable accommodation submitted for concurrent review with another discretionary land use application shall be reviewed by the authority reviewing the discretionary land

use application. The applicable review authority shall make a written determination and either grant, grant with modifications, or deny a request for reasonable accommodation in accordance with Subsection E (Findings and Conditions of Approval) below in this Section as part of its action(s) regarding the discretionary land use application.

E. **Findings and Conditions of Approval.**

1. **Findings.** The written decision to grant, grants with modifications, or deny a request for reasonable accommodation will be consistent with the Acts and shall require the following findings of approval:

   a. The housing that is the subject of the request will be used by an individual or a group of individuals considered disabled under the Acts, and the accommodation requested is necessary to make specific housing available to the individual or group of individuals with (a) disability(ies) under the Acts;

   b. Alternative reasonable accommodations that are within existing parameters (e.g., zoning district regulations) that would provide an equivalent level of benefit are not available or suitable for a particular case;

   c. The requested reasonable accommodation will not impose an undue financial or administrative burden on the County;

   d. The requested reasonable accommodation is consistent with the County General Plan land use designation of the property that is the subject of the reasonable accommodation request, and with the applicable zoning district;

   e. The requested reasonable accommodation does not substantially affect the physical attributes of the property;

   f. The requested reasonable accommodation will not adversely impact surrounding land uses.

2. **Conditions of Approval.** In granting a request for reasonable accommodation, the Director or other reviewing authority may impose any conditions of approval deemed reasonable and necessary to ensure that the reasonable accommodation would comply with the findings required in Subsection 1 above in this Section.

3. While a request for reasonable accommodation is pending, all laws and regulations otherwise applicable to the property that is the subject of the request shall remain in full force and effect.

F. **Appeal of Determination.**

A determination by the reviewing authority to grant, with modifications, or deny a request for reasonable accommodation may be appealed pursuant to Section 130.52.090 (Appeals) below in this Chapter.

130.52.090 Appeals.

Any decision by the review authority of original jurisdiction may be appealed by the applicant or any other affected party, as follows:

A. An appeal must be filed within 10 working days from the decision by the review authority by completing the appeal form and submitting said form together with the applicable fee, as established by resolution of the Board, to the Department. The appellant shall clearly identify on the appeal form the specific reasons for the appeal and the relief requested.

B. The hearing body for the appeal shall consider all issues raised by the appellant and may consider other relevant issues related to the project being appealed. The hearing body for the appeal shall be as follows:

1. All decisions of the Director are appealable to the Commission and then to the Board.

2. All decisions of the Zoning Administrator and the Commission are appealable to the Board.

3. All decisions of the Board are final.

C. The hearing on an appeal shall be set no more than 30 days from receipt of a completed appeal form and fee. If the Board meeting is canceled for any reason on the date on which the appeal would normally be heard, the appeal shall be heard on the first available regularly-scheduled meeting following the canceled meeting date. The 30-day time limitation may be extended by mutual consent of the appellant(s), the applicant, if different from the appellant, and the appeals body. Once the date and time for the hearing is established the hearing may be continued only by such mutual consent.

D. In any appeal action brought in compliance with this Section, the appellant(s) may withdraw the appeal, with prejudice, at any time prior to the commencement of the public hearing. For the purposes of this Section, the public hearing shall be deemed commenced upon the taking of any evidence, including reports from staff.

E. Upon the filing of an appeal, the Commission or the Board shall render its decision on the appeal within 60 days.

F. No person shall seek judicial review of a County decision on a planning permit or other matter in compliance with this Title until all appeals to the Commission and Board have been first exhausted in compliance with this Section.

CHAPTER 130.54 – PERMIT IMPLEMENTATION, TIME LIMITS, AND EXTENSIONS

Sections:

130.54.010 Content
130.54.020 Effective Date of Permit Approvals
130.54.030 Applications Deemed Automatically Approved
130.54.040 Permits to Run with the Land
130.54.050 Performance Guarantees
130.54.060 Time Limits, Extensions, and Permit Expiration
130.54.070 Revisions to an Approved Permit or Authorization
130.54.080 Re-submittals
130.54.090 Revocation or County Mandated Modification of a Permit

130.54.010 Content

This Chapter contains general requirements for the implementation of the approved permits and authorizations required under this Article including time limits for permit implementation, procedures for granting time extensions or revisions to an approved permit, and revocation of permit approvals.

130.54.020 Effective Date of Permit Approvals

Except in the case of a Specific Plan (Chapter 130.56 – Specific Plans) or Development Agreement (Chapter 130.58 – Development Agreements) below in this Article, final action on any permit or authorization approval of the Zoning Administrator or Commission shall become effective 11 working days from the decision by the review authority where no appeal of the approval has been filed in compliance with Section 130.52.090 (Appeals) above in this Article. A decision by the Board is final and effective on the date of the action, unless otherwise required by state law. A properly filed appeal shall stay the issuance of any such permit or authorization until the appeal is decided.

130.54.030 Applications Deemed Automatically Approved

A permit or authorization application that is deemed automatically approved in compliance with California Government Code Section 65956 shall be subject to all applicable provisions under Section 130.51.070 (Conditions of Automatic Approvals) above in this Article, which shall be satisfied by the applicant before a building permit is issued or a use not requiring a building permit is established.

130.54.040 Permits to Run with the Land

Any Minor and Conditional Use Permit, Variance, or Development Plan Permit approval that is granted in compliance with Chapters 130.51 (General Application Procedures) and 130.52 (Permit Requirements, Procedures, Decisions, and Appeals) above in this Article shall be deemed to run with the land through any change of ownership of the subject site from the effective date of the permit, providing it is in compliance with Subsection 130.54.050.A (Deposit of Security) below in this Chapter, when applicable, and with any licensing requirements by the new property owner. All active conditions of approval shall continue to apply after a change in property ownership.

130.54.050 Performance Guarantees

A. **Deposit of Security.** As a condition of approval of a Conditional/Minor/Temporary Use Permit, Development Plan Permit, or Variance, and upon a finding that the public health, safety, and welfare warrants it, the review authority may require a form of surety in a reasonable amount to ensure the faithful performance of one or more of the conditions of approval of the aforementioned permits or authorizations.

1. The applicant may elect to provide adequate surety for the faithful performance of a condition(s) of approval if the Director determines that the condition(s) may be implemented at a later specified date due to reasons beyond the applicant’s control, such as the inability to install required landscaping due to poor weather conditions.

2. The surety shall be in the form of cash, certified or cashier's check, letter of credit, performance bond, or other form of surety executed by the applicant and a corporate surety authorized to do business in California and approved by the County.

B. **Release of Security.** Upon satisfactory compliance with all applicable provisions of this Section, the security deposit shall be released.

C. **Failure to Comply.**

1. Upon failure to perform any secured condition, the County may perform the condition or cause it to be done, and may collect from the applicant and surety, in the case of a bond, all costs incurred, including administrative, engineering, legal, and inspection costs.

2. Any unused portion of the security shall be refunded to the applicant after deduction of the cost of the work.

3. The Director's determination may be appealed to the Board by the applicant, by filing an appeal with the Clerk of the Board within 10 days after the decision to withhold the bond, in compliance with Section 130.52.090 (Appeals) above in this Article.

130.54.060 Time Limits, Extensions, and Permit Expiration

A. **Time Limits.** A permit or authorization that is not exercised within 24 months from the effective date shall expire and become void unless a condition of approval or other provision of this Article establishes a different time limit or unless an extension of time is approved in compliance with Subsection B (Time Extensions), below in this Section.

1. The permit or authorization shall be deemed "exercised" when the applicant has commenced actual construction or alteration under an active building permit and at least one inspection has been conducted and approved by the Building Official or, in cases where a building permit is not required, has substantially commenced the approved activity or allowed use on the site in compliance with the conditions of approval.

2. After it has been exercised, a permit or authorization shall remain valid as long as either a building permit remains active for the project or a final Certificate of Occupancy has been granted, in compliance with Subsection C (Permit Expiration) below in this Section.

3. The expiration of a permit or authorization associated with a tentative subdivision or parcel map, specific plan or development agreement, shall coincide with the term of that entitlement and not be subject to the time extension in Subsection B (Time Extensions) below in this Section.

B. **Time Extensions.** The County may extend the time limit for a permit or authorization in compliance with the following procedures:

1. The applicant shall file a written request for an extension of time with the Department at least 30 days before the expiration of the permit or authorization, together with the required filing fee established through resolution of the Board.

2. A permit or authorization may be extended for a total of 36 months beyond the expiration of the original decision granting approval.

3. Action on a request for extension of a permit shall be referred to the original review authority, except as provided in Subsection 3.a, below in this Section. The time limit for exercising a permit or authorization may be extended by one of the following methods:

a. The Director finds that:
   (1) Substantial progress has been made in implementing the permit; or the applicant has established, with substantial evidence, that circumstances beyond the control of the applicant, such as poor weather during periods of planned construction, have prevented exercising the permit or authorization; or
   (2) Not more than 36 months will be necessary to exercise the permit, in compliance with Subsection A.1 (Time Limits) above in this Section; or

b. The original review authority finds that:
   (1) No change in conditions or circumstances has occurred that would have been grounds for denying the original application; and
   (2) The applicant has been diligently pursuing implementation of the permit.

4. Modified conditions may be imposed when a time extension is granted that update the permit where required to protect the public health and safety or to comply with provisions of state or federal law.

C. **Permit Expiration.**

1. All permits authorized by this Chapter shall automatically expire by operation of law when time frame established in Subsection A has elapsed, unless a time extension has been approved under Subsection B (Time Extensions) above in this Section.

2. When it is discovered that a permit has expired, the Department shall send notice of such termination to the property owner and/or applicant. Failure to send such notice shall not affect the expiration of the permit.

3. After the expiration of a permit or authorization, whether through denial of a request for a time extension, failure to request a time extension, or other cause, no further work shall be done on the site until a new permit or authorization and any subsequent building permit or other County permits are first obtained.

130.54.070 Revision to an Approved Permit or Authorization

All structures and uses shall be constructed or otherwise established only as approved by the review authority, and in conformance with all conditions of approval, except as provided herein. Modifications of the conditions of approval provided for in this Chapter, including alteration of the project design, expansion, reduction, or phasing of the development, or further disturbance of the site, may be allowed as follows:

A. An application for a revision to an approved permit or authorization may be submitted to the Department either before or after the commencement of construction or establishment of an approved use. The application shall consist of a written description of the proposed modifications, appropriate supporting documentation, plans, or other information deemed necessary by the Director to evaluate the proposed change.

B. The Director may approve a minor modification(s) when the findings can be made that the modification(s):

1. Does not involve a feature of the project that was specifically addressed in the conditions of approval, mitigation measures, or findings for approval of the project;
2. Does not result in an expansion of the project;
3. Does not substantially alter the original approval decision; and
4. Does not result in changed or new impacts to the surrounding environment that would necessitate modifications to the CEQA document approved for the project.

C. Revisions to a permit or authorization which result in an expansion or substantial alteration of the project, or which may affect a condition of approval, mitigation measure, or finding that was specifically addressed by the review authority, may only be approved by said authority following a public hearing.

D. Director approval of minor modifications shall be processed using the Staff Review with Notice procedures. If the Director determines that the request requires a public hearing by the review authority of original jurisdiction, notice shall be given in compliance with the same noticing requirements of the original application.

E. The review authority may modify or impose new conditions to the permit revision when necessary to carry out the original permit or when necessary to protect the public health and safety or to comply with provisions of state or federal law.

F. Appeal of a decision on a Revision to an Approved Permit or Authorization shall be processed in compliance with Section 130.52.090 (Appeals) above in this Article.

130.54.080 Resubmittals

A. For a period of 12 months following the date of the disapproval of a discretionary planning permit or amendment, no application for the same or substantially similar planning permit or amendment shall be filed for the same site, or any portion of the

site, except where the Director determines that substantial new evidence or proof of changed circumstances warrants further consideration.

B. The Director shall determine whether a new application is for a planning permit or amendment that is the same or substantially similar to a previously approved or disapproved permit or amendment, and shall either process or reject the application in compliance with this Section. The Director's determination may be appealed to the Commission in compliance with Section 130.52.090 (Appeals) above in this Article.

130.54.090 Revocation or County Mandated Modification of a Permit

Any permit authorized under this Article may be revoked or modified by the County when it is found that conditions required for the approval of the permit have been violated, have lacked substantial compliance, or when the use is determined to be a public nuisance.

A. The following procedures shall be used for revocation or mandated modification of previously approved permits or authorizations:

1. The review authority of original jurisdiction shall hold a public hearing to revoke or modify a permit or authorization granted in compliance with the provisions of this Article. Where the review authority was the Director, the hearing shall be referred to the Zoning Administrator for determination.

2. Notice shall be provided to the owner of the property, as shown on the County's current equalized assessment roll, and to the applicant for the permit or approval if different from the property owner on which the use or structure authorized by the permit being considered for revocation exists for the permit or approval being considered for revocation.

3. Notice shall be mailed through the U.S. Postal Service, certified, first class, and postage paid, at least twelve days prior to the public hearing for all permits being considered for revocation except Temporary Use Permits, which shall require mailed notice three days prior to the hearing.

4. Any permit or authorization may be revoked or modified by the review authority if any one of the following findings can be made:

   a. Circumstances under which the permit or authorization was granted have been changed by the applicant to the extent that one or more of the findings that justified the original approval can no longer be made;

   b. The permit or authorization was granted, in whole or in part, on the basis of a misrepresentation or omission of a material statement in the application, or in the testimony presented by the applicant during the public hearing;

c. One or more of the conditions of approval have not been substantially fulfilled or have been violated;

d. An improvement authorized in compliance with the permit is in violation of any applicable code, law, ordinance, regulation, or statute; or

e. The improvement/use allowed by the permit has become detrimental to the public health, safety, or welfare; or the manner of operation constitutes and/or is creating a public nuisance;

5. As an alternative to revocation, the County may mandate modification of a permit or authorization including the duration of the permit or authorization, any operational aspect of the project, or any other aspect or condition determined to be reasonable and necessary to ensure that the project is operated in a manner consistent with the original findings for approval.

6. The County's action to revoke a permit or authorization shall have the effect of terminating it and denying the privileges granted by the original approval.

B. Any permit revoked by the review authority may be appealed in compliance with Section 130.52.090 (Appeals) above in this Article.

C. **Use after Revocation.** When an approved permit or authorization has been revoked, no further development or use of the property authorized by the revocation shall be continued, except in compliance with the approval of a new permit or authorization required by this Title.

THIS PAGE INTENTIONALLY LEFT BLANK

CHAPTER 130.56 – SPECIFIC PLANS

Sections:

130.56.010 Content
130.56.020 Approval Authority
130.56.030 Findings Required
130.56.040 Contents of Specific Plan
130.56.050 Conformance to Specific Plan Required
130.56.060 Amendments

130.56.010 Content

This Chapter contains the procedures to implement the General Plan for a part of the area covered by the General Plan, as set forth in California Government Code Section 65450 et seq.

130.56.020 Approval Authority

The Board shall have review authority of original jurisdiction for specific plan applications, after review and recommendation by the Commission in compliance with Chapters 130.50 (Application Filing and Processing) and 130.51 (General Application Procedures) above in this Article. The Board shall approve the specific plan by resolution or by ordinance. The approval of a specific plan is a discretionary project pursuant to CEQA.

130.56.030 Findings Required

The Board may adopt a proposed specific plan only if it finds that the plan:

A. Is consistent with and implements the General Plan;

B. Is consistent with any applicable airport land use plan, in compliance with Public Utilities Code Section 21676; and

C. Will not have a significant effect on the environment or a statement of overriding consideration has been made for the proposed specific plan in compliance with the provisions of California Code of Regulations Section 15093 (CEQA Guidelines).

130.56.040 Contents of Specific Plan

An applicant shall submit a proposed specific plan for review that includes the following detailed information in formats of text, diagrams, and maps, on an application form provided by the Department:

A. A statement of the relationship of the specific plan to the General Plan;

B. A site plan showing the distribution, location, and extent of uses proposed within the area covered by the specific plan;

C. Identification of the proposed distribution, location, extent, and intensity of public and private infrastructure and facilities for transportation, sewage, storm water drainage, solid waste disposal, energy, education, fire protection, or other essential modes proposed to be located in the specific plan area to support the uses described within;

D. Standards and criteria by which development will proceed within the specific plan area and standards for the conservation, development, and utilization of natural resources, where applicable;

E. Implementation measures including regulations, programs, public works projects, and financing measures necessary to carry out the provisions of Subsections A through D, above in this Section.

130.56.050 Conformance to Specific Plan Required

After adoption of a specific plan, no local public works project, Development Plan Permit, tentative map, or parcel map may be approved, and no ordinance may be adopted or amended within the specific plan area unless it is consistent with the adopted specific plan.

130.56.060 Amendments

An adopted specific plan may be amended through the same procedure set forth in this Chapter for the adoption of a specific plan.

CHAPTER 130.58 – DEVELOPMENT AGREEMENTS

Sections:

130.58.010 Content; Assurances to Applicant
130.58.020 Limitation
130.58.030 Review Authority
130.58.040 Findings Required
130.58.050 Form of Agreement
130.58.060 Amendment, Cancellation, or Assignment
130.58.070 Recordation
130.58.080 Periodic Review
130.58.090 Rules, Regulations, and Official Policies

130.58.010 Content; Assurances to Applicant

This Chapter establishes procedures and requirements for the adoption and amendment of development agreements in compliance with California Government Code Section 65864 et seq. A development agreement provides assurances to an applicant of a development project that, upon approval, the project may proceed in accordance with the conditions placed upon it by the review authority, as well as with existing policies, rules, and regulations. Development agreements strengthen the public planning process, encourage private participation in comprehensive planning, and reduce the economic costs of development.

130.58.020 Limitation

Unless otherwise expressed in this Title, the provisions in this Chapter are the exclusive procedures and rules relating to development agreements and, in the event of conflict, these provisions shall prevail over any other provisions of this Title.

130.58.030 Review Authority

The Board shall have review authority of original jurisdiction for development agreement applications, based on the review and recommendation by the Commission in compliance with Chapters 130.50 (Application Filing and Processing) and 130.51 (General Application Procedures) above in this Article. The Board shall approve the development agreement by ordinance. The approval of a development agreement is a discretionary project pursuant to CEQA.

130.58.040 Findings Required

The Board may approve the development agreement only if it finds that the agreement:

A. Is consistent with the objectives, policies, general land uses, and programs specified in the General Plan and any applicable specific plan;

B. Will not be detrimental to the health, safety, and welfare of persons residing in the immediate area or detrimental to the general welfare of the residents of the County as a whole;

C. Will not adversely affect the orderly development of property or the preservation of property values;

D. Is consistent with the provisions of California Government Code Sections 65864 through 65869.5; and

E. If the development agreement includes a subdivision of 500 or more units, the agreement provides that there is sufficient water to serve any tentative map in compliance with California Government Code Section 66473.7.

130.58.050 Form of Agreement

A. The development agreement shall be in a form approved by County Counsel and shall contain the following:

1. A legal description of the subject property;

2. The allowed uses of the property;

3. The density or intensity of use;

4. The maximum height and size of proposed buildings;

5. Provisions for reservation or dedication of land for public purposes; and

6. The term of the agreement to a maximum of twenty years.

B. The development agreement may include conditions, restrictions, and requirements for subsequent discretionary actions, provided they shall not prevent development of the land for the uses and density or intensity of development set forth in the agreement.

C. The agreement may provide that construction will commence within a specified time and that the project, or any phase thereof, will be completed within a specified time.

130.58.060 Amendment, Cancellation, or Assignment

A. Either party may request an amendment or cancellation, in whole or in part, of any development agreement, either by procedures specifically set forth within the agreement or by the application process in compliance with Chapters 130.50 (Application Filing and Processing) and 130.51 (General Application Procedures) above in this Article, on a form provided by the Department.

B. An amendment or cancellation of the development agreement may occur upon mutual consent of the Board, the parties to the agreement, the qualified applicant(s) if different from the parties to the agreement, or as otherwise provided in the agreement.

C. All assignments of the development agreement shall be subject to mutual agreement by all parties to the agreement, unless otherwise provided in the agreement. Any party to the agreement, excluding the County, may initiate a request for assignment. As part of the request for assignment, any amendments to the development agreement that may be required as a result of the assignment shall be identified.

130.58.070 Recordation

Within 10 days after the effective date of a development agreement or any amendment or cancellation thereof, the Clerk of the Board shall have the agreement, amendment, or cancellation notice recorded with the County Recorder.

130.58.080 Periodic Review

A. The Director shall review the development agreement not less than once every twelve months from its effective date for compliance with its terms and conditions.

B. The Director shall begin the review proceedings by giving notice of the periodic review of the development agreement to each party to the agreement, excluding the County, and to each party entitled to notice in compliance with Section 130.51.050 (Public Notice) above in this Article.

C. The Director shall conduct an investigation as to whether or not there has been good faith compliance and if it is found that there has not been such compliance a report with recommendations shall be filed with the Clerk of the Board.

D. Upon receipt of the report, the Clerk of the Board shall place the matter on the Board's agenda for public hearing, subject to public notice requirements.

E. If the Board finds and determines on the basis of substantial evidence that the applicant has complied in good faith with the terms and conditions of the agreement during

the period under review, no further action is required. The burden of proof on this issue shall be on the applicant.

F. If the Board determines on the basis of substantial evidence that the property owner has not complied in good faith with the terms and conditions of the agreement during the period under review, the Board may modify or terminate the agreement.

130.58.090 Rules, Regulations, and Official Policies

Unless otherwise provided by the development agreement:

A. The rules, regulations, and official policies of the County applicable to the development of the property that is subject to the development agreement, shall be those rules, regulations, and official policies in force at the time of the execution of the agreement.

B. In subsequent actions on said property, the development agreement shall not prevent the County from applying new rules, regulations, or policies that do not conflict with those rules, regulations and policies in force at the time the agreement was executed.

C. The development agreement shall not prevent the County from denying or conditionally approving any subsequent development project application on said property on the basis of such existing or new rules, regulations, and policies.

ARTICLE 6 – ZONING ORDINANCE ADMINISTRATION

CHAPTER 130.60 – ADMINISTRATIVE RESPONSIBILITIES

Sections:

130.60.010 Planning Agency Established; Functions Defined
130.60.020 Director and Department
130.60.030 Zoning Administrator
130.60.040 Planning Commission
130.60.050 Board of Supervisors
130.60.060 Technical Advisory Committee
130.60.070 Design Review Committee
130.60.080 Floodplain Administrator

CHAPTER 130.61 – NONCONFORMING USES, STRUCTURES, AND LOTS

Sections:

130.61.010 Content; Applicability
130.61.020 Continuation, Transfer, or Sale
130.61.030 Legal Nonconforming Structures
130.61.040 Nonconforming Uses
130.61.050 Changes or Expansion of Legal Nonconforming Uses
130.61.060 Nonconforming Lots
130.61.070 Structures and Uses Under Construction
130.61.080 Determination of Abandoned Nonconforming Uses
130.61.090 Appeal of Determination of Abandoned Nonconforming Uses
130.61.100 Restoration of Abandoned Nonconforming Uses
130.61.110 Public or Private Nuisance

CHAPTER 130.63 – AMENDMENTS AND ZONE CHANGES

Sections:

130.63.010 Content
130.63.020 Ordinance Amendments and Zone Change Applications
130.63.030 General Plan and Specific Plan Amendments

CHAPTER 130.65 – COVENANT OF EASEMENT

Sections:

130.65.010 Applicability
130.65.020 Form of Covenant
130.65.030 Effect of Covenant
130.65.040 Release of Covenant
130.65.050 Enforceability

CHAPTER 130.67 – CODE ENFORCEMENT

Sections:

130.67.010 Content
130.67.020 Conformance by County Officials
130.67.030 Administration and Enforcement
130.67.040 Abatement of Nuisance and Penalty for Violation
130.67.050 Subsequent Permits
130.67.060 Remedies Cumulative
130.67.070 Investigation Fee

CHAPTER 130.68 – POST-DISASTER REBUILDING

Sections:

130.68.010 Content
130.68.020 Exceptions
130.68.030 Applicability
130.68.040 General Provisions
130.68.050 Modifications of the Provisions of this Title
130.68.060 CEQA Exemption
130.68.070 Appeals

CHAPTER 130.60 – ADMINISTRATIVE RESPONSIBILITIES

Sections:

130.60.010 Planning Agency Established; Functions Defined
130.60.020 Director and Department
130.60.030 Zoning Administrator
130.60.040 Planning Commission
130.60.050 Board of Supervisors
130.60.060 Technical Advisory Committee
130.60.070 Design Review Committee
130.60.080 Floodplain Administrator

130.60.010 Planning Agency Established; Functions Defined

This Chapter establishes a planning agency as provided by California Government Code Section 65100, comprised of the Board, the Commission, the Zoning Administrator, the Director and the Department. The planning agency shall perform all of the following functions:

A. Prepare, periodically review, and revise, as necessary, the General Plan.

B. Implement the General Plan through actions including but not limited to the administration of adopted community design standards, specific plans, and ordinances.

C. Annually review the capital improvement program of the County and the public works projects of other local agencies for their consistency with the General Plan.

D. Promote public interest, understanding, and comment on the general plan and regulations relating to it.

E. Consult and advise with public officials and agencies, public utility companies, civic, educational, professional, and other organizations, and citizens generally concerning implementation of the General Plan.

F. Promote the coordination of local plans and programs with the plans and programs of other public agencies.

G. Perform other functions as provided by the Board, including conducting studies and preparing plans other than those required or authorized by California Government Code Title 7, Sections 65100, et seq.

H. Determine the adequacy of Environmental Impact Reports and other special reports in compliance with the California Environmental Quality Act (CEQA) and Section

130.51.030 (Application Filing and Processing - Environmental Review) in Article 5 (Planning Permit Processing) of this Title.

130.60.020 Director and Department

The Director shall have the responsibility and authority to direct the performance and responsibilities assigned by the Board in compliance with Title 2 (Administration and Personnel) of the County Code of Ordinances, which includes the administration and enforcement of the provisions of this Title. Except where otherwise provided by this Title, the aforementioned responsibilities of the Director may also be carried out by Department staff under the supervision of the Director, to include but not be limited to the following:

A. Perform staff-level project review, with or without notice. For other discretionary applications, make recommendations of approval, conditional approval, or denial to the proper review authority under Table 130.50.030.A (Review Authority) in Article 5 (Planning Permit Procedures) of this Title.

B. Make investigations and reports on the design and improvements of proposed subdivisions and other discretionary applications affecting the development of real property, and make or recommend imposition of requirements or conditions on these applications.

C. Prepare documents for the implementation of State Planning and Land Use Law (California Government Code Section 65000 et seq.) and other miscellaneous planning related laws. These documents shall include administrative policies, procedures, ordinances, resolutions, and project application filing forms, information, and requirements, and other public information documents.

D. Act as or appoint the Zoning Administrator for purposes of complying with California Government Code Section 65900 et seq.

130.60.030 Zoning Administrator

The Director or a designee shall serve as the Zoning Administrator in compliance with Subsection 130.60.020.D (Director and Department) above in this Chapter, as follows:

A. The Zoning Administrator shall serve as the hearing officer and is assigned the review authority of original jurisdiction to consider and approve or deny applications for development applications in compliance with Table 130.50.030.A (Review Authority) in Article 5 (Planning Permit Procedures) of this Title, parcel map applications under Title 120 (Subdivisions) of the County Code of Ordinances, and any other matter specifically provided by this Title. When the Zoning Administrator is a designee of the Director, that person shall also perform his/her other duties appropriate to the personnel title of the designee. The designee shall be subordinate and directly responsible to the Director and/or any intermediate supervisory staff in

the performance of all duties except those of the Zoning Administrator. However, the designee shall not be subordinate to, nor under the direction or control of the Director when performing the duties of the Zoning Administrator.

B. The Zoning Administrator may transfer original hearing jurisdiction to the Commission at his/her discretion when it is deemed necessary because of policy implications, unique or unusual circumstances, or the magnitude of a project.

130.60.040 Planning Commission

The Commission, in compliance with Title 2 (Administration and Personnel) of the County Code of Ordinances, shall serve as the hearing body assigned to consider and approve or deny development applications under this Title and Title 120 (Subdivisions) of the County Code of Ordinances as either the review authority of original jurisdiction or on appeal, in compliance with Table 130.50.030.A (Review Authority) in Article 5 (Planning Permit Procedures) of this Title. The Commission shall serve as an advisory agency to the Board on legislative actions including zone changes and general plan amendments, and any other matter specifically provided by this Title.

130.60.050 Board of Supervisors

The Board shall act as the review authority for land use applications that require a public hearing and legislative action, and for those that are referred or appealed to the Board in compliance with Table 130.50.030.A (Review Authority) in Article 5 (Planning Permit Procedures) of this Title.

130.60.060 Technical Advisory Committee

A Technical Advisory Committee (TAC), as defined in Article 8 (Glossary: see "Technichal Advisory Committee") of this Title, shall review all applications for discretionary permits and, within the scope of their regulatory authority, provide comments and requirements to the Department that are recommended for the development of the project. The Department shall schedule a meeting to review said comments and requirements with the applicant, in compliance with the following procedures:

A. The TAC shall meet as soon as possible after the application has been deemed complete, in compliance with Subsection 130.51.020.F (Application Forms, Submittal Process, and Fees) in Article 5 (Planning Permit Procedures) of this Title. In more complex projects, the Department may determine that a meeting date is required prior to the application being deemed complete in order to provide more immediate direction to the applicant.

B. Meetings shall be noticed concurrently with the initial consultation letter sent by the Department to those agencies having jurisdiction or interest in the project for their review and comments.

C. The TAC meeting, as an advisory part of the permit process, is not open to the general public. The TAC meeting shall be open to the applicant and/or the applicant's agent and, at their discretion, anyone else involved in the project, such as project managers, civil engineers, or environmental consultants.

130.60.070 Design Review Committee

The Board may establish by resolution a design review committee to review and comment upon discretionary development applications within the boundaries of the design review district. The terms and arrangements for the committee shall be as follows:

A. **Composition.** A design review committee shall consist of no fewer than three and not more than five members. County officials shall not be included. The members shall be selected and appointed by the Board, as follows:

1. At least three members shall be residents and owners of property located within the district boundaries.

2. When more than three members comprise the committee, up to two additional members may be owners of commercial property located within the district boundaries.

B. **Compensation.** The appointed members of the design review committee shall serve without compensation and shall not be entitled to reimbursement of mileage or necessary expenses by the County.

C. **Appointment.** The term of office of each member shall be four years or until the first appointment and qualification of their successor. The first members shall classify themselves by lot so that the term of office of two members is two years, and remaining members is three years. Members otherwise serve until the appointment and qualification of their successor. Any member, even though they serve for a term, may be removed by the Board at any time without cause. A vacancy may be filled only for the unexpired term. All vacancies on the committee shall be immediately reported to the Board.

D. **Officers.** At the first meeting of the design review committee, and thereafter at the first meeting of each calendar year, the committee shall elect from its membership a chairman, vice chairman, and secretary, who shall hold office for a term of one year and until the election of their successors.

E. **Meetings.** Meetings may be held on the call of the chairman or any two members when matters are referred for committee review in compliance with Subsection H (Powers and Duties of the Design Review Committee) below in this Section, by mailing notice of the time, place, and purpose of the meeting to each member at least seven days prior to the meeting. The meetings, including public notice of such meetings, shall conform to the requirements of California Government Code Section 54950 et seq.

F. **Quorum.** The majority of the appointed committee members shall constitute a quorum for the transaction of business, which translates to two out of three sitting members, or three out of four or five sitting members.

G. **Lapse of Membership.** For reasons including, but not limited to continued absence, a member of the design review committee may be removed from office without cause, by an order adopted by a majority vote of the Board declaring that office vacant.

H. **Powers and Duties of the Design Review Committee.** The design review committee shall have the following duties and powers:

1. Act in an advisory capacity to the Director, Commission, or Board with regard to providing review and comment on discretionary development applications for multi-unit residential, commercial, mixed-use, and industrial applications within their district boundaries.

2. Provide recommendations to the Board and the Director regarding the adoption, improvement, or modification of design review procedures and standards.

3. Review projects for consistency with any related adopted design guidelines, standards, and ordinances.

130.60.080 Floodplain Administrator

The Director or a designee is appointed to administer, implement, and enforce the provisions of Chapter 130.32 (Flood Damage Prevention Ordinance) in Article 3 (Site Planning and Project Design Standards) of this Title by performing the duties and responsibilities under Section 130.32.040 (Administration) in Article 3 (Site Planning and Project Design Standards) of this Title.

THIS PAGE INTENTIONALLY LEFT BLANK

CHAPTER 130.61 – NONCONFORMING USES, STRUCTURES, AND LOTS

Sections:

130.61.010 Content; Applicability
130.61.020 Continuation, Transfer, or Sale
130.61.030 Legal Nonconforming Structures
130.61.040 Legal Nonconforming Uses
130.61.050 Changes or Expansion of Legal Nonconforming Uses
130.61.060 Nonconforming Lots
130.61.070 Structures and Uses Under Construction.
130.61.080 Determination of Abandoned Nonconforming Uses
130.61.090 Appeal of Determination of Abandoned Nonconforming Uses
130.61.100 Restoration of Abandoned Nonconforming Uses
130.61.110 Public or Private Nuisance

130.61.010 Content; Applicability

Within the County there exist uses and structures that were lawfully established before the adoption of this Title, but which may be prohibited, regulated or restricted differently under the terms of this Title, as amended.

This Chapter specifies the manner in which these legal nonconforming uses and structures may be continued, and may be expanded under certain circumstances. It also establishes criteria by which such uses or structures may be abated or removed in an equitable, reasonable, and timely manner without infringing on the constitutional rights of property owners.

130.61.020 Continuation, Transfer, or Sale

Change of ownership, tenancy or management of a legal nonconforming use, structure or lot shall not affect its legal nonconforming status, provided the specific use and intensity of use do not change, except as allowed in this Chapter.

130.61.030 Legal Nonconforming Structures

A legal nonconforming structure may be continued and maintained as follows:

A. A legal nonconforming structure may be restored if it is involuntarily damaged or destroyed by fire, other catastrophic event, or the public enemy, up to its pre-damage size and placement. Construction shall be completed within three years if located within a Community Region or five years if located in the remaining unincorporated area of the County.

B. A legal nonconforming structure or any part of it that is voluntarily destroyed or removed, may be rebuilt within the same footprint within three years if located within a Community Region or five years if located in the remaining unincorporated area of the County, or shall lose all nonconforming status for any part or parts affected and may not be reconstructed.

C. A legal nonconforming structure may be repaired or altered, including structural alterations to bearing walls, columns, beams and girders, or may be increased in area or volume if the addition complies with this Title and the most recent County adopted Building Code.

D. A legal nonconforming structure or accessory structure may be used or converted to any use that conforms to the zone district in which it is located and complies with the most recent County adopted Building Code. Such structure or accessory structure will not lose its nonconforming status if it has been vacant for any time.

E. A structure considered non-conforming because it does not observe the required setbacks of the zone may be increased in area or volume, provided that the addition does not encroach further into the required setback.

130.61.040 Legal Nonconforming Uses

A legal nonconforming use may be continued and maintained as follows:

A. No increase in intensity or of the area, space, or volume occupied or devoted to a legal nonconforming use, except as allowed in this Chapter shall be allowed.

B. A legal nonconforming use that has ceased or been abandoned for a continuous period of more than twelve consecutive months or more shall lose its nonconforming status, and the continued use of that property or structure shall conform to the regulations of the zone district in which it is located, except as allowed.

If the legal nonconforming use is cultivated agricultural land, the use shall not be considered abandoned if it is part of a managed agricultural operation where such land is planned for continued cultivation.

C. If a legal nonconforming use involves the keeping of animals, then the number of animals, types of animals, minimum lot area for animals, or other standards for the keeping of animals not in conformance with the zone district in which they are located, may be continued until the owner or occupant removes them for a continuous period of more than twelve consecutive months or more.

D. Additional uses are allowed on property that contains a legal nonconforming use provided those uses meet all requirements and regulations of the zone district in which they are located, and do not result in the nonconforming use expanding as restricted in this Chapter.

E. If a legal nonconforming use is converted to a conforming use, no previous nonconforming use may be resumed.

F. Repairs and alterations may be made to structures containing legal nonconforming uses, including structural alterations to bearing walls, columns, beams and girders, or an increase in area or volume. All work shall meet the requirements of the most recent County adopted Building Code.

G. A structure containing a legal nonconforming use may be restored up to its pre-damaged size and density if it is involuntarily damaged or destroyed by fire, other catastrophic event, or the public enemy. Reconstruction of the structure shall be allowed if the use is to be reestablished.

H. A structure occupied by a legal non-conforming use that has ceased or been abandoned according to this Chapter may be allowed to be used for the same or less intensive use if the structure or structures cannot feasibly be used for any use consistent with the zone district in which it is located.

I. A legal nonconforming use where no structure is involved may be restored up to its pre-damaged size and intensity if it is involuntarily damaged or destroyed. The use shall be reestablished within five years of the date of the damage.

130.61.050 Changes or Expansion of Legal Nonconforming Uses

The Commission may allow changes or expansions to legal non-conforming uses as set forth by a Conditional Use Permit. Procedures adopted for Conditional Use Permits shall be consistent with Article 5 (Planning Permit Procedures) of this Title, and the findings in Subsection D below in this Section shall be made by the Commission prior to approval.

A. A legal nonconforming use may be changed to another nonconforming use of the same or less intensive nature.

B. A legal nonconforming use may be enlarged, expanded, or extended when such use is necessary due to economic market demands for the goods, products, or services provided.

C. The time limits specified in this Chapter may be extended.

D. The Commission shall make one or more of the following findings regarding changes or expansions to legal nonconforming uses:

1. The proposed change or expansion of the legal nonconforming use is essential and/or desirable to the public convenience or welfare.

2. The change or expansion of the nonconforming use will not have a negative impact on the surrounding conforming uses and the area overall.

3. Other property where the use would be conforming is unavailable, either physically or economically, within the limits of the nearest similarly developed area(s).

4. No other appropriate remedies are available to bring the use into conformance, including amending the zone or zoning ordinance text.

130.61.060 Legal Nonconforming Lots

Nonconforming lots are those lots legally created in compliance with Chapter 120.76 (Certificate of Compliance) of Title 120 (Subdivisions) of the County Code of Ordinances that do not conform to the lot area and dimension standards for the zones in which they are located. Nonconforming lots shall be subject to the following:

A. The uses allowed in the zone shall be allowed on a nonconforming lot.

B. Development standards for the zone in which the lot is located, including setbacks, shall be applied to all development on the lot.

130.61.070 Structures and Uses Under Construction.

Any structure for which the County has issued a building permit that is still in effect, or any conforming use or building which was legally under construction before the effective date of any ordinance rendering the structure or use nonconforming, may be completed and used according to approved plans, specifications or permits as follows:

A. For nonconforming uses, the use shall be commenced within two years of the effective date of the ordinance rendering such use nonconforming.

B. For nonconforming structures, the construction shall be commenced within two years and completed within three years of the effective date of the ordinance rendering such structure nonconforming.

130.61.080 Determination of Abandonment – Nonconforming Use

Any nonconforming use that is deemed by the Director to be discontinued or abandoned for a period in excess of twelve consecutive months shall cease, subject to the provisions in this chapter and the property owner shall have the burden of proof.

For purposes of calculating the twelve-month period, a use may be deemed discontinued or abandoned upon the occurrence of any of the following events:

1. On the date when the use of the land is physically vacated or the date that existing structure(s) or facilities cease to be actively maintained, whichever comes first;
2. On the date of termination of any lease or contract under which the nonconforming use has occupied the land;

3. On the date a request for final reading of utility meters is made to the applicable utility districts.

If the nonconforming use is discontinued or abandoned for a period of more than twelve consecutive months, any subsequent use of land shall conform to the applicable standards and criteria specified by this Title for the Zone District in which such land is located.

130.61.090 Appeal of Determination of Abandoned Nonconforming Uses

A determination of an abandoned nonconforming use may be appealed to the Commission. All appeal requests shall be submitted in writing on the approved appeal form within 20 business days from the date of notification by the County. All appeals shall be submitted with the then current processing fee, as established by resolution of the Board.

All appeal requests shall include at minimum a detailed description of all positive action(s) taken to maintain the nonconforming use during the time when the use was deemed by the Director to be discontinued or abandoned. During review of the appeal, the Commission shall:

1. Find that the nonconforming use may continue subject to the provisions of this Chapter; or

2. Find that the nonconforming use has been abandoned pursuant to this Chapter.

130.61.100 Restoration of Abandoned Nonconforming Uses

Restoration of an abandoned nonconforming uses may be allowed by Administrative Permit pursuant to standards for approval in Article 5 (Planning Permit Processing) of this Title. In addition to standard requirements, the Director shall also make the following five additional findings:

1. Positive action(s) will be taken to resume the nonconforming use within a reasonable period;

2. The nature and character of proposed structure(s) are substantially the same as that for which the structure(s) were originally designed;

3. There is no material difference in the quality, character or degree of use;

4. The proposed use will not adversely affect the other uses allowed by right in the Zone Districts of adjacent parcels; and

5. The nonconforming use will not be detrimental to the public health, safety or welfare or be injurious to the neighborhood.

If in the opinion of the Director, restoration of the abandoned nonconforming use could contain potentially significant environmental impacts subject to CEQA or if the above findings cannot be made, a Conditional Use Permit (CUP) shall be required from the Commission pursuant to Article 5 (Planning Permit Processing) of this Title to consider restoration of the nonconforming use.

130.61.110 Public or Private Nuisance

Nothing contained within this Chapter shall be construed to allow a legal nonconforming use to be conducted in such a way as to constitute a public or private nuisance, or a danger to the public health, safety and welfare.

CHAPTER 130.63 – AMENDMENTS AND ZONE CHANGES

Sections:

130.63.010 Content
130.63.020 Ordinance Amendments and Zone Change Applications
130.63.030 General Plan and Specific Plan Amendments

130.63.010 Content

This Chapter provides for amendments to this Title by changing either its provisions or the zone designation applicable to a parcel(s) through the respective text amendment or zone change application process.

130.63.020 Ordinance Amendments and Zone Change Applications

A. The text amendment process may be initiated by one of the following:

1. By application of the owner(s) of the property for which the text change is sought;

2. Resolution of intention of the Board; or

3. Resolution of intention of the Commission.

B. A zone change application may be initiated by one of the following:

1. The owner(s) of the property for which the zone change is sought;

2. Resolution of intention of the Board; or

3. Resolution of intention of the Commission.

C. Following the filing of an application, or adoption of a resolution of intention of the Board or Commission as provided for in Subsections A or B above in this Section, and the completion of the application requirements, environmental review, and noticing procedures as provided for in Chapter 130.51 (General Application Procedures) in Article 5 (Planning Permit Procedures) of this Title, the Commission shall hold a public hearing on the request. The Commission shall make a report of its findings and a recommendation to the Board on the proposed text or zone change amendment.

D. Where a zone change amendment to a higher density or intensity zone is being proposed, the Commission and the Board shall consider the criteria identified in

General Plan Policy 2.2.5.3, including, but not limited to, consistency with the General Plan as to minimum parcel size or maximum density, availability of adequate infrastructure and support services for the increased land use demands, and compatibility with surrounding land uses.

E. Following the hearing by the Commission, the Board shall hold a public hearing on the request. The Board may approve, modify, or disapprove the recommendation of the Commission, in part or in whole, provided the Board finds that the proposed text or zone change amendment is consistent with the General Plan. Any substantial modification to the proposed request made by the Board that was not previously considered by the Commission shall be referred back to the Commission for further findings and recommendation on that specific modification.

F. A text or zone change amendment shall become effective on the 30th day following the adoption of an ordinance by the Board.

130.63.030 General Plan and Specific Plan Amendments

Amendments to the General Plan or any adopted specific plan, hereinafter referred to as "Plan amendments", shall be processed in the same manner as amendments to this Title in compliance with California Government Code Section 65358, except that the Plan amendments, if approved by the Board, shall be adopted by resolution rather than ordinance. A Plan amendment shall become effective on the 30th day following the adoption of a resolution by the Board.

CHAPTER 130.65 – COVENANT OF EASEMENT

Sections:

130.65.010 Applicability
130.65.020 Form of Covenant
130.65.030 Effect of Covenant
130.65.040 Release of Covenant
130.65.050 Enforceability

130.65.010 Applicability

In compliance with California Government Code Section 65870 et seq., a Covenant of Easement in favor of the County, may be required to achieve the use goals of the County as a condition of approval by the review authority to provide for open space, emergency access, ingress and egress, landscaping, parking, or light and air access to provide for solar and wind energy generation.

130.65.020 Form of Covenant

The form of the Covenant shall include the following, where applicable, subject to approval by County Counsel:

A. A description of the real property that is subject to the easement and the real property to be benefited by the easement;

B. The approval, permit, or designation granted, which relied upon or required the Covenant; and

C. The purpose(s) of the easement.

130.65.030 Effect of the Covenant

A Covenant of Easement shall become effective upon recordation in the County Recorder's Office, as executed by the owner(s) of the real property. Upon recordation:

A. The Covenant shall act as an easement in compliance with Civil Code Section 801 et seq., except that it shall not merge into any other interest in the real property.

B. The Covenant shall be enforceable by all successors-in-interest to the real property benefited by the Covenant in compliance with Civil Code Section 1104.

C. Notice of the Covenant shall be imparted to all persons to the extent afforded by the recording laws of the State.

130.65.040 Release of Covenant

A Covenant of Easement may be released by the Director acting as Zoning Administrator in compliance with Section 130.60.030 (Zoning Administrator) above in this Article, at the request of any person, whether or not that person has title to the real property, by the following process:

A. A noticed public hearing shall be conducted in compliance with Subsection 130.51.051.C (Notice Requirements and Procedure) in Article 5 (Planning Permit Processing) of this Title.

B. Prior to approving the request, findings shall be made that the Covenant on the property is no longer necessary to achieve the land use goals of the County.

C. A notice of the release of the Covenant of Easement shall be recorded by the Director in the County Recorder's Office, in compliance with Section 130.54.020 (Effective Date of Permit Approvals) in Article 5 (Planning Permit Processing) of this Title.

130.65.050 Enforceability

Nothing in this Section creates standing in any person, other than the County and owner(s) of the real property burdened or benefited by the Covenant, to enforce or to challenge the Covenant or any requested amendment or release.

CHAPTER 130.67 – CODE ENFORCEMENT

Sections:

130.67.010 Content
130.67.020 Conformance by County Officials.
130.67.030 Administration and Enforcement.
130.67.040 Abatement of Nuisance and Penalty for Violation.
130.67.050 Subsequent Permits
130.67.060 Remedies Cumulative
130.67.070 Investigation Fee

130.67.010 Content

This Chapter contains provisions to ensure compliance with the requirements of this Title and any conditions of permit approval.

130.67.020 Conformance by County Officials

All departments, officials, and employees of the County that are vested with the duty or authority to issue permits or licenses shall conform to the provisions of this Title and all other ordinances and shall issue no permit or license for uses, buildings, or purposes where they would be in conflict with the provisions of this Title.

130.67.030 Administration and Enforcement

It shall be the duty of the Director to administer the provisions of this Title in compliance with Chapter 9.02 (Code Enforcement) of Title 9 (Public Peace, Morals and Welfare) of the County Code of Ordinances. The Director shall be aided in this enforcement responsibility by the officers and authorized representatives of the County agencies, departments, and offices charged with the responsibility of administering, implementing, and ensuring compliance with the provisions of this Title.

130.67.040 Abatement of Nuisance and Penalty for Violation

Any structure erected, constructed, altered, enlarged, converted, moved, or maintained, or any land or structure that is used contrary to either the provisions of this Title or any condition of approval imposed through discretionary authorization, shall be declared unlawful and be subject to the provisions of Chapter 9.02 (Code Enforcement) of Title 9 (Public Peace, Morals and Welfare) of the County Code. Any act or omission made unlawful under this Title shall also include abetting, aiding, allowing, causing, or permitting the act or omission.

130.67.050 Subsequent Permits

Where a structure or use of a lot is not in compliance with the provisions of this Title, no subsequent permit shall be issued by the County for any other structure or use on the same lot until such time as the illegal structure or use is brought into compliance or otherwise abated, except where such a permit would bring the illegal structure or use into compliance.

130.67.060 Remedies Cumulative

The remedies provided for in this Chapter shall be cumulative and not exclusive.

130.67.070 Investigation Fee

Upon determination that a violation of the provisions of this Title has occurred, the property owner shall be liable for the costs incurred by County staff for investigation and enforcement, as set forth in the adopted fee resolution, as may be amended from time to time.

CHAPTER 130.68 – POST-DISASTER REBUILDING

Sections:

130.68.010 Content
130.68.020 Exceptions
130.68.030 Applicability
130.68.040 General Provisions
130.68.050 Modifications of the Provisions of this Title
130.68.060 CEQA Exemption
130.68.070 Appeals

130.68.010 Content

This Chapter contains regulations for the expeditious repair and reconstruction of structures damaged as a result of a disaster for which a local emergency has been declared by the Board. This Chapter allows modifications to some sections of this Title but does not allow exemptions from any health and safety requirements.

130.68.020 Exceptions

The provisions of this Chapter, including the relaxation of development standards, are not applicable to structures located in a designated hazard area, such as special flood hazard, dam failure inundation, and avalanche hazard areas, or in any mapped area established by separate action of the Board or other authorized official, as a moratorium area due to hazards to health and safety caused by the disaster, which require in-depth study before allowing rebuilding of any kind.

130.68.030 Applicability

The provisions of this Chapter are applicable for a period of 180 days following each disaster for which a local emergency has been declared by the Board. The Board may extend the provisions as necessary.

130.68.040 General Provisions

A. Structures illegally constructed or uses illegally established before the disaster shall not be reconstructed or reestablished.

B. Nonconforming structures shall be subject to the requirements under Section 130.61.030 (Legal Nonconforming Structures) above in this Article.

C. Where the provisions of this Chapter do not conform to other provisions of this Title, the provisions of this Chapter shall prevail.

130.68.050 Modifications of the Provisions of this Title

Whether or not the processing of building permit applications (hereinafter referred to as "application") is expedited based on either direction from the Board or Director's determination, the following modifications to the provisions of this Title shall be allowed, as follows:

A. **Application Requirements.** In order to be eligible for modifications of the provisions of this Title and expedited application processing, when allowed, an application shall meet all of the following criteria:

1. The application shall be for the reconstruction or repair of damage caused by the disaster;

2. The application shall have been filed after the occurrence of the disaster;

3. The application site is not within a designated hazard area; and

4. The application does not violate applicable county, state, or federal law.

B. **Submittal Information Required.** The County may require evidence that the previous use or structure existed prior to the disaster, including but not limited to: aerial photos, copies of building permits, County Assessor's records, original construction plans, photographs, property deeds, reports/studies, and surveys. Evidence that the damage to the structure was the result of the disaster may also be required.

C. **Conforming Structures and Uses.**

1. Submittal of previously approved site and building plans shall be allowed for the in-kind reconstruction of conforming structures in all zones. Where no previously approved plans are available for review or when alteration or expansion of conforming structures are being proposed, reconstruction will be subject to the standard site and building plan requirements for an application.

2. Conforming structures occupied by conforming uses which are subject to a discretionary permit, to include but not be limited to a Conditional/Minor Use Permit, Variance, or Design Review Permit, may be reconstructed subject to previously approved site and building plans, with review by staff to ensure compliance with the discretionary permit. In the case where an approved site plan is not available for review, the property owner shall obtain issuance of an Administrative Permit in compliance with Section 130.52.010 (Administrative

Permit, Relief, or Waiver) in Article 5 (Planning Permit Processing) of this Title, to ensure compliance with the discretionary permit and all applicable development standards for the zone.

D. **Temporary Structures.** Temporary mobile homes or recreational vehicles may be placed on any site made uninhabitable by disaster until such time as permanent structures can be completed, in compliance with time limits under Section 130.68.030 (Applicability) above in this Chapter, as follows:

1. **Residential Housing**. Temporary residential use of mobile homes or recreational vehicles shall be allowed on the lot where a residential unit(s) is made uninhabitable by the disaster in compliance with Subsection 130.40.190.B.2 (Mobile/Manufactured Homes: Temporary While Constructing) in Article 4 (Specific Use Regulations) of this Title. One temporary mobile home or recreational vehicle for each unit previously located on the property may be installed after issuance of a temporary occupancy permit, which may be issued prior to issuance of the reconstruction permit(s).

2. **Non-residential Uses.** Temporary mobile homes or recreational vehicles for non-residential uses, either singly or in groups, shall be allowed in any zone except residential zones and on the same lot as the damaged or destroyed structure, subject to the issuance of a temporary occupancy permit in compliance with Section 130.40.190 (Mobile/Manufactured Homes) in Article 4 (Specific Use Regulations) of this Title.

3. **Exception to Development Standards.** Under a temporary occupancy permit, development standards for the zone, such as setbacks, may be modified so that placement of the temporary mobile home or recreational vehicle will allow for unobstructed reconstruction on the site, providing said placement does not have an adverse impact on public health and safety.

130.68.060 CEQA Exemption

All applications and permits approved under the provisions of this Chapter are exempt from the requirements of CEQA in compliance with Public Resources Code Sections 21080 (b)(2-3) and 21172, and Section 15269 of the CEQA Guidelines.

130.68.070 Appeals

All decisions provided for in this Chapter shall be appealable in compliance with Chapter 130.52.090 (Appeals) in Article 5 (Planning Permit Processing) of this Title.

THIS PAGE INTENTIONALLY LEFT BLANK

ARTICLE 7 – FEES

CHAPTER 130.70 – BASS LAKE HILL SPECIFIC PLAN SUPPLEMENTAL TENTATIVE MAP SUBMITTAL FEE

Sections:

130.70.010 Title, Purpose, and Intent
130.70.020 Definitions
130.70.030 Findings of the Board of Supervisors
130.70.040 Fee Requirement
130.70.050 Amount of Fee
130.70.060 Time of Payment and Refunds
130.70.070 Uses of Fee Revenue
130.70.080 Creation of Fee Account
130.70.090 Fee Exemption

CHAPTER 130.71 – ECOLOGICAL PRESERVE FEE

Sections:

130.71.010 Purpose
130.71.020 Applicability
130.71.030 Definitions
130.71.040 Ecological Preserve Mitigation and Fee in Lieu of Mitigation
130.71.050 On-Site Mitigation In Mitigation Area 0
130.71.060 Off-site Mitigation or Fee Payment in Lieu of Ecological Preserve Mitigation in Mitigation Areas 1 and 2
130.71.070 Ecological Preserve Fee; Formula
130.71.080 Annual Fee Review
130.71.090 Time of Fee Payment
130.71.100 Exemption or Credits
130.71.110 Accounting
130.71.120 Handling
130.71.130 Appeals
130.71.140 Termination of Mitigation Requirement or Fee in Lieu of Mitigation

CHAPTER 130.72 – MISSOURI FLAT PLANNING COST REIMBURSEMENT FEE

Sections:

130.72.010 Title, Purpose and Intent
130.72.020 Definition
130.72.030 Findings of Board of Supervisors

130.72.040 Fee Requirement
130.72.050 Amount of Fee
130.72.060 Time of Payment; Refunds
130.72.070 Uses of Fee Revenue
130.72.080 Creation of Fee Account
130.72.090 Fee Credits
130.72.100 Fee Exemptions
130.72.110 Separability

CHAPTER 130.70 – BASS LAKE HILLS SPECIFIC PLAN SUPPLEMENTAL TENTATIVE MAP SUBMITTAL (BLHSP STMS) FEE

Sections:

130.70.010 Title, Purpose, and Intent
130.70.020 Definitions
130.70.030 Findings of the Board of Supervisors
130.70.040 Fee Requirement
130.70.050 Amount of Fee
130.70.060 Time of Payment and Refunds
130.70.070 Uses of Fee Revenue
130.70.080 Creation of Fee Account
130.70.090 Fee Exemption

130.70.010 Title, Purpose, and Intent

This Chapter shall be known as the Bass Lake Hills Specific Plan Supplemental Tentative Map Submittal (BLHSP STMS) Fee Ordinance. Its purpose is to authorize a Bass Lake Hills Specific Plan Reimbursement Fee, as described in the Bass Lake Hills Specific Plan. It is the intent of this Chapter to establish a method to reimburse the Bass Lake Hills Specific Plan Initial Participation Developer (aka Bass Lake Hills Specific Plan Trust) and the County for costs incurred in the preparation and adoption of the Bass Lake Hills Specific Plan and the environmental documents. BLHSP STMS Fees shall be paid to the County by developers who derive benefit from the Specific Plan. The County, in turn, may use fees collected in compliance with this Chapter to reimburse the Bass Lake Hills Specific Plan Trust and the County for financial contributions toward the preparation and adoption of the Bass Lake Hills Specific Plan and environmental documents.

130.70.020 Definitions

A. "**Initial Participation Developer**" is the Bass Lake Hills Specific Plan Trust, or its successors in interest, who participated in funding the development and preparation of the Bass Lake Hills Specific Plan in compliance with the Reimbursement Agreement.

B. "**Reimbursement Agreement**" shall mean that certain agreement dated April 25, 1995, and Amendment I dated January 27, 1998 by and between the County of El Dorado and the Bass Lake Hills Specific Plan Trust.

C. "**Eligible Costs**" shall mean all costs incurred by the County in the preparation of the Bass Lake Hills Specific Plan including, but not limited to, costs for environmental, engineering, traffic engineering, financial, drafting, and legal services. Eligible costs shall also include, but are not limited to, those costs for which funding was provided under the Reimbursement Agreement.

D. The "**Bass Lake Hills Specific Plan Area**" shall mean an approximate 1,200-acre area within the El Dorado Hills Community Region north of U.S. Highway 50 along Bass Lake Road containing approximately 88 individual parcels, as shown on Exhibit A of the Bass Lake Hills Specific Plan.

E. The "**Bass Lake Hills Specific Plan**" or "**BLHSP**" shall mean the Bass Lake Hills Specific Plan adopted by the Board on November 7, 1995, under Resolution No. 288-95, as amended.

130.70.030 Findings of the Board

In establishing the BLHSP STMS Fee, the Board finds as follows:

A. The BLHSP was prepared and adopted by the County to facilitate the orderly and systematic development of the BLHSP Area through the establishment of a comprehensive planning program consistent with the El Dorado County General Plan.

B. Costs were incurred by the County in preparing the BLHSP and its supporting documents. Initial Participation Developer bore a portion of the costs incurred by the County in compliance with the terms of the Reimbursement Agreement.

C. Persons or entities seeking to develop projects in the BLHSP Area derive substantial benefits from the preparation and adoption of the BLHSP in that:

1. Environmental documents prepared in connection with the BLHSP, including the Program Environmental Impact Report (EIR) and Program EIR Addendum, reduce the scope and cost of subsequent environmental review that otherwise is required in connection with BLHSP Area development projects;

2. Preparation of the BLHSP substantially reduces the scope and cost of planning review otherwise required in connection with BLHSP Area developments projects; and

3. The BLHSP provides a mechanism for addressing public facilities and services necessary to support allowed development and describes the funding mechanisms necessary for implementation in a comprehensive manner not feasible in the context of individual project review.

D. The establishment of the fee provided in this Chapter is based upon the lawful exercise of the County's police power and is consistent with all applicable state law. Section 65456(a) through (d) of the California Government Code allows the imposition of a specific plan fee upon persons seeking government approvals which are required to be consistent with the specific plan.

130.70.040 Fee Requirement

A BLHSP STMS Fee is established to reimburse the County and/or Initial Participation Developers for expenses associated with preparing and adopting the BLHSP. The BLHSP STMS Fee shall be applicable to all new residential subdivision projects, to existing vacant residential lots when development requires a building permit, and to all non-residential development which results in conversion of planned residential development to commercial land use within the BLHSP.

130.70.050 Amount of Fee

The BLHSP STMS Fee will be established by a resolution adopted by the Board in compliance with this Chapter. The resolution shall describe and document the costs to be reimbursed, the allocation of the costs, and the resulting amount of the fee. The fee amount included in the resolution shall be supported by a report, which fully documents the costs included and the allocation method used.

130.70.060 Time of Payment and Refunds

The BLHSP STMS Fee shall be payable as a condition of any residential subdivision development approval or permit necessary to develop existing vacant residential lots, and is payable prior to the recordation of a final map or the issuance of a building permit. The BLHSP STMS Fee shall be payable for any non-residential development as a condition of project approval or the issuance of a building permit. The BLHSP STMS Fee is a permit processing fee to reimburse the County for costs incurred in the adoption of the BLHSP. It is not a monetary exaction for the purposes of defraying the costs of public facilities. Payment of the BLHSP STMS Fee is in addition to any applicable fee(s) which may be imposed to offset impacts to public facilities. No applicant shall be entitled to a refund of the BLHSP STMS Fee collected if, for any reason, development subject to the BLHSP STMS Fee does not proceed.

130.70.070 Uses of Fee Revenue

Revenue generated from the BLHSP STMS Fee shall be used only to reimburse the County and/or Initial Participating Developer for Eligible Costs incurred in the preparation and adoption of the BLHSP.

130.70.080 Creation of Fee Account

Reimbursement Fees shall be deposited in a restricted account maintained by the County. Revenue within this account, and any interest accrued thereon, shall be used solely for the purpose set forth in Section 130.70.010 (Title, Purpose, and Intent) above in this Chapter.

130.70.090 Fee Exemptions

Public park sites and public buildings and structures including libraries, schools, fire stations, and public utility structures and facilities are exempt from payment of the BLHSP STMS Fee.

THIS PAGE INTENTIONALLY LEFT BLANK

CHAPTER 130.71 – ECOLOGICAL PRESERVE FEE

Sections:

130.71.010 Purpose
130.71.020 Applicability
130.71.030 Definitions
130.71.040 Ecological Preserve Mitigation and Fee in Lieu of Mitigation
130.71.050 On-Site Mitigation in Mitigation Area 0
130.71.060 Off-site Mitigation or Fee Payment in Lieu of Ecological Preserve Mitigation in Mitigation Areas 1 and 2
130.71.070 Ecological Preserve Fee; Formula
130.71.080 Annual Fee Review
130.71.090 Time of Fee Payment
130.71.100 Exemption or Credits
130.71.110 Accounting
130.71.120 Handling
130.71.130 Appeals
130.71.140 Termination of Mitigation Requirement or Fee in Lieu of Mitigation

130.71.010 Purpose

The purpose of this Chapter is to implement the Pine Hill Endemics rare plant fee payment in lieu of mitigation for Mitigation Areas 1 and 2.

130.71.020 Applicability

The fee program set forth in this Chapter shall apply to all lands delineated as Pine Hill Endemic Rare Plant Mitigation Areas 1 and 2, as defined in Section 130.71.030 (Definitions) below in this Chapter.

130.71.030 Definitions

As used in this Chapter, the following terms shall have the meanings set forth below:

Mitigation Area 0. Lands within the Gabbro Soils Rare Plant Ecological Preserve, as shown on maps on file in the Department, adopted by Ordinance 4500.

Mitigation Area 1. Lands outside of Mitigation Area 0 but within the area described as the "rare soils study area," as shown on maps on file in the Department, adopted by Ordinance 4500.

Mitigation Area 2. Lands outside of Mitigation Areas 0 and 1 but within the EID service area, excluding those lots served by wells, as shown on maps on file in the Department, adopted by Ordinance 4500.

Pine Hill Endemics. Plants found in serpentine or gabbroic soils that are listed as rare, threatened, or endangered on a state or federal list prepared under the Federal or California Endangered Species Acts or identified as species of special concern. This term includes the following species:

El Dorado bedstraw	Galium californicum ssp. sierrae
Laynes butterweed	Senecio layneae
Pine Hill ceanothus	Ceanothus roderickii
Pine Hill flannel bush	Fremontodendron californicum ssp. decumbens
Stebbins morning glory	Calystegia stebbinsii
Bisbee Peak rush rose	Helianthemum suffrutescens
El Dorado mule ears	Wyethia reticulata
Red Hills soaproot	Chlorogalum grandiflorum *Ord. 4500 modified*

130.71.040 Ecological Preserve Mitigation and Fee in Lieu of Mitigation

There are hereby established an Ecological Preserve Mitigation requirement comprised of on-site and off-site mitigation standards and an ecological preserve fee in lieu of such mitigation. The amounts of the fee shall be established periodically by resolution of the Board and shall be based on the formula set forth in this Ordinance.

130.71.050 On-Site Mitigation in Mitigation Area 0

Development within Mitigation Area 0 will continue to address mitigation for impact to rare plants on an individual basis. Within Mitigation Area 0, on-site mitigation is strongly encouraged. Developments within Mitigation Area 0 shall mitigate impacts by exercising one of the following three options:

A. Set aside a part of the property and dedicate a perpetual conservation easement for habitat protection; or
B. Cluster development in the least environmentally sensitive portion of the property according to the Implementation Strategy adopted by the County in March 1993 and receive in appropriate cases a density bonus in return for dedication of a perpetual conservation easement over the remainder of the property; or
C. Provide an independent mitigation plan that meets CEQA requirements, such as the purpose of long-term protection of an amount of habitat in the same Ecological Preserve and as close to the development site as feasible, equal to at least 1.5 times the acreage developed.

Option B, above, shall apply only to properties greater than five (5) acres in area.

130.71.060 Off-site Mitigation or Fee Payment in Lieu of Ecological Preserve Mitigation in Mitigation Areas 1 and 2

Payment of a fee in lieu of Ecological Preserve Mitigation is encouraged in Mitigation Areas 1 and 2. Developments in Mitigation Areas 1 and 2 shall mitigate impacts by exercising one of the following two options:

A. Pay the appropriate fee in lieu of Ecological Preserve Mitigation for the direct or indirect impacts caused by development on rare plants and rare plant habitat; or

B. Participate in a Rare Plant Off-Site Mitigation Program, upon adoption of such program by the Board.

130.71.070 Ecological Preserve Fee; Formula

The amount of the fee is based on the following formula: Mitigation Areas 1 and 2 are each assigned 50 percent of the total local cost of the Rare Plant Mitigation Program, based upon the probability that 50 percent of the total adverse impact of development on rare plant habitat will be caused by future development within each Mitigation Area. The fee is then charged on a per dwelling unit equivalent basis, where one single-family unit equals one dwelling unit equivalent, one multi-family unit equals 0.75 dwelling unit equivalent, and 1,500 square feet of commercial space equals one dwelling unit equivalent. The actual amount of the fees per dwelling unit equivalent in Mitigation Areas 1 and 2 are as set forth in the then-current Board resolution establishing the actual fee amounts.

130.71.080 Annual Fee Review

The fee amounts shall be reviewed on an annual basis and adjusted as necessary to insure that the anticipated fees are no more and no less than required for the purpose for which they are collected.

130.71.090 Time of Fee Payment

The fee is due at the time of final inspection or certificate of occupancy, whichever is first, unless the Board in adopting the fee resolution establishes that the fee may be collected at any earlier time.

130.71.100 Exemption or Credits

If the Director, in consultation with the California Department of Fish and Wildlife (DFW) and the United States Fish and Wildlife Service (USFWS), finds that a development project which has already received all needed discretionary approvals at the effective date of this

chapter has already met its mitigation obligations in whole or in part, such project will be exempted or credited against its Rare Plant Mitigation Obligation or fee in lieu thereof to a degree equivalent to the mitigation already provided. No other exemptions or credits to the Rare Plant Mitigation or fee in lieu thereof shall be allowed.

130.71.110 Accounting

The County shall maintain a separate rare plant ecological preserve account for fees collected, and provide an accounting within 60 days of the close of each fiscal year. Any person may request an audit of the fund. In addition, the County shall make findings each fifth fiscal year following the first deposit into the fund with respect to unexpended portions of the fund, in which the County: identifies the purpose to which the fee is to put; demonstrates a reasonable relationship between the fee and the purpose for which it is charged; identifies all sources and amounts of funding anticipated to complete financing; and designates the approximate dates on which the funding is expected to be deposited.

130.71.120 Handling

The fee shall be collected by the Planning and Building Department. The County treasurer shall maintain the account. The Department, in consultation with DFW and USFWS, shall make recommendations to the Board regarding the expenditures of funds from the account to acquire or maintain designated preserve land.

130.71.130 Appeals

An appeal from a decision made pursuant to this Ordinance shall be in accordance with the appeals procedures set forth in Section 130.52.090 (Appeals) in Article 5 (Planning Permit Processing) of this Title, expect that DFW shall also be notified of the appeal hearing in writing at least five days in advance of the hearing.

130.71.140 Termination of Mitigation Requirement or Fee in Lieu of Mitigation

The requirements of mitigation or payment of a fee in lieu of Ecological Preserve Mitigation shall terminate at such time as the Board finds, and DFW and USFSWS concur, that a fully funded system of five rare plant preserves has been established in the on-going operation and maintenance of said preserves is fully funded.

CHAPTER 130.72 – MISSOURI FLAT PLANNING COST REIMBURSEMENT FEE

Sections:

130.72.010 Title, Purpose, and Intent
130.72.020 Definition
130.72.030 Findings of Board of Supervisors
130.72.040 Fee Requirement
130.72.050 Amount of Fee
130.72.060 Time of Payment; Refunds
130.72.070 Uses of Fee Revenue
130.72.080 Creation of Fee Account
130.72.090 Fee Credits
130.72.100 Fee Exemptions
130.72.110 Separability

130.72.010 Title, Purpose, and Intent

This Chapter shall be known as the Missouri Flat Planning Cost Reimbursement Fee ordinance. It authorizes a Missouri Flat Master Circulation and Funding Plan Reimbursement Fee, as described in the Missouri Flat Master Circulation and Funding Plan (MC&FP). It is the intent of this Chapter to establish equity among future developers who derive benefit from the MC&FP and its supporting documents (including California Environmental Quality Act compliance), by reimbursing the County for the costs incurred in the preparation and adoption of the MC&FP and related activities. The County, in turn, may use fees collected in compliance with this Chapter to reimburse initial participating developers for their financial contributions toward adoption of the MC&FP. Any such reimbursement commitments shall be documented in written agreements between the County and the specific developers.

130.72.020 Definitions

A. "**Initial Participating Developers**" shall mean those persons or entities who participated in funding the development and preparation of the MC&FP in compliance with the Cooperative Funding Agreement.

B. "**Cooperative Funding Agreement**" shall mean that certain Missouri Flat Road Circulation Plan Funding Agreement dated April 15, 1997, by and between the County of El Dorado, Sundance Plaza Associates, Ltd., Wal-Mart Stores, Inc., and Village/El Dorado Partners, L.P., as amended.

C. "**Eligible Costs**" shall mean all costs incurred by the County in the preparation of the MC&FP including, but not limited to, costs for environmental, engineering, traffic engineering, financial, economic, drafting and legal consulting services. Eligible

costs shall include, but are not limited to, those costs for which funding was provided under the Cooperative Funding Agreement. Eligible costs may also include legal costs incurred in any action in which the validity of the MC&FP is challenged.

D. "**Missouri Flat Area**" shall mean that area identified as the Missouri Flat Road Project Area in Exhibit "A" to Ordinance No. 4565.

E. "**Missouri Flat Master Circulation and Funding Pla**n" or "**MC&FP**" shall mean the Missouri Flat Master Circulation and Funding Plan adopted by the Board on December 15, 1998, as amended.

130.72.030 Findings of the Board

In establishing the MC&FP Reimbursement Fee, the Board finds as follows:

A. The MC&FP was prepared and adopted by the County in order to provide a comprehensive and coordinated approach to address both existing traffic congestion in the Missouri Flat Area and the issue of providing capacity for future development in the Missouri Flat Area. Attempting to address these issues on a project-by-project basis as development occurs would be uneconomic and may be infeasible.

B. Substantial costs were incurred by the County in preparing the MC&FP and supporting documents including, but not limited to, a Program Environmental Impact Report. Certain private entities bore a portion of the costs incurred by the County in compliance with the terms of the Cooperative Funding Agreement.

C. Persons or entities seeking to develop non-residential projects in the Missouri Flat Area will derive substantial benefits from the preparation and adoption of the MC&FP in that:

1. Environmental documents prepared in connection with the MC&FP, including the Program EIR, substantially reduce the scope and cost of environmental review otherwise required in connection with subsequent development projects;

2. Preparation of the MC&FP substantially reduces the scope and cost of planning review otherwise required in connection with subsequent development projects;

3. The MC&FP provides a mechanism for addressing both existing traffic congestion and future capacity needs in a comprehensive manner not feasible in the context of individual project review;

4. The MC&FP provides a mechanism to mitigate certain traffic impacts of future non-residential development in a manner not feasible in the context of individual project review;

5. The MC&FP may reduce or eliminate the need to consider implementation of discretionary review procedures for development to ensure that potential traffic impacts of development otherwise requiring only ministerial approvals are addressed; and

6. The MC&FP will enable necessary road improvements and thereby will facilitate future economic development in the County and the Missouri Flat Area.

D. The establishment of the fee provided in this Chapter is based upon the lawful exercise of the County's police power and is consistent with all applicable state laws.

130.72.040 Fee Requirement

A Missouri Flat Planning Cost Reimbursement Fee is established to reimburse the County and/or private parties for expenses associated with preparing and adopting the MC&FP. The Reimbursement Fee shall be applicable to all non-residential development requiring a building permit within the Missouri Flat Area, except as otherwise provided in this Chapter.

130.72.050 Amount of Fee

The Reimbursement Fee will be established by a Resolution adopted by the Board in compliance with this Chapter. The Resolution shall describe and document the costs to be reimbursed, the allocation of the costs, and the resulting amount of the Fee. The fee amount included in the Resolution shall be supported by a report, which fully documents costs included and the allocation method used.

130.72.060 Time of Payment; Refunds

The Reimbursement Fee shall be payable as a condition of any development approved or allowed and is payable prior to the issuance of a building permit. The Reimbursement Fee is a permit processing fee to reimburse the County for costs incurred, and is not a monetary exaction for the purposes of defraying the cost of public facilities. No applicant shall be entitled to a refund of the Reimbursement Fees collected if, for any reason, development subject to the Reimbursement Fee does not proceed.

130.72.070 Uses of Fee Revenue

Revenue generated from the Reimbursement Fee shall be used only to reimburse the County and Initial Participating Developers for Eligible Costs incurred in the preparation and adoption of the MC&FP and its supporting documents, and in related activities.

130.72.080 Creation of Fee Account

Reimbursement Fees shall be deposited in a restricted account maintained by the County. Revenue within this account, and any interest accrued thereon, shall be used solely for the purpose set forth in Section 130.72.010 (Title, Purpose, and Intent) above in this Chapter. Once monies in the account are disbursed to reimburse the County for its costs incurred, those monies shall be unrestricted revenue of the County.

130.72.090 Fee Credits

The following credits shall be available:

A. The Initial Participating Developers or their assignees, if they are applicants for building permits, shall be granted a credit against the Reimbursement Fee in an amount up to the amount contributed by the applicant under the Cooperative Funding Agreement, less any reimbursements previously received. Such credits received shall be deemed reimbursement for purposes of calculating future credits and reimbursements. The Fee Credit shall not exceed the Reimbursement Fees levied by Resolution in compliance with this Chapter at the time the Fee Credit is applied for.

B. Any applicant shall receive a credit against the Reimbursement Fee in an amount equal to Reimbursement Fees previously paid for development approvals or permits on the same property if the development for which the prior Reimbursement Fees were paid did not occur and all permits and entitlements for such development have expired or are relinquished.

130.72.100 Fee Exemptions

Public park sites and public buildings and structures, including libraries, schools, fire stations, and public utility structures, are exempt from the Reimbursement Fee.

130.72.110 Separability

The provisions of this Chapter are separable, and the invalidity of any phrase, clause, or part shall not affect the validity of the remainder.

ARTICLE 8 – GLOSSARY

CHAPTER 130.80 – GLOSSARY

Sections:

130.80.010 Contents
130.80.020 Definitions of Specialized Terms and Phrases

CHAPTER 130.80 – GLOSSARY

Sections:

130.80.010 Contents
130.80.020 Definitions of Specialized Terms and Phrases

130.80.010 Contents

This Article contains definitions of terms and phrases used in this Zoning Ordinance that are technical or specialized, or that may not reflect common usage. If any of the definitions in this Article conflict with definitions in other provision of the County Code, these definitions shall control only the provisions of this Zoning Ordinance. As used in this Zoning Ordinance, the following terms and phrases shall have the meaning ascribed to them in this Article, unless the context in which they are used clearly suggests otherwise. If a word is not defined in this Article, or in other provision of the El Dorado County Code, the Director shall determine the correct definition, subject to appeal.

130.80.020 Definitions of Specialized Terms and Phrases

Accessory Structures and Uses. A structure or use customarily associated with a primary structure or use. (See also "Structure, accessory", and Section 130.40.030: Accessory Structures and Uses, in Article 4: Specific Use Regulations, of this Title).

Adjacent. Physically touching or bordering upon; sharing a common property line. (General Plan Glossary)

Adult Business Establishment (Use Type)**.** Bookstores, bars, lounges, restaurants, theaters, cabarets, hotels or motels, or other business or establishment which have a substantial or significant portion of the stock in trade, or fare, books, magazines, pictures, films, media or live entertainment, which are distinguished or characterized by their emphasis on matter or live conduct depicting, describing, exposing, or relating to specific sexual activities or specified anatomical areas, as defined in Section 5.34.020 (Definitions: Adult-related establishments) of Title 5 (Business Taxes, Licenses and Regulations) of the County Code of Ordinances. (See also Section 130.40.040: Adult Business Establishments in Article 4: Specific Use Regulations, of this Title).

Agri-tourism. A commercial enterprise at a working farm, ranch or other agricultural business conducted for the enjoyment of visitors that generates supplemental income for the owner/ operator. Agri-tourism may include, but is not limited to, outdoor recreation such as horseback riding or hiking, educational experiences that feature the farm, ranch or natural environment, local food or wine tasting, agricultural homestays and guest ranches, agricultural lodging, and on-farm or ranch direct sales.

Agricultural Employee Housing. See "Employee Housing: Agricultural"

Agricultural Fencing. Fencing constructed of woven or mesh wire, barbed wire, electrified wire, board construction, and similar materials creating a barrier at least 50 percent open, as described in the California Food and Agricultural Code Section 130121 for the purpose of containing livestock and/or controlling predators.

Agricultural Homestays (Use Type)**.** See "Lodging Facilities"

Agricultural Structure. See "Structure: Agricultural"

Agricultural Support Services (Use Type)**.** Agriculturally related services, such as processing, packing, and storage of agricultural products; sales, maintenance, and repair of farm machinery and equipment; domestic farm animal sales; veterinary clinics; custom farming services; agriculturally-related building supply, feed and farm supply stores; agri-tourism facilities; greenhouses and nurseries; equestrian facilities; agricultural waste handling and disposal services; and other similar related services. (See also Section 130.40.070: Agricultural Support Services, in Article 4: Specific Use Regulations, of this Title).

Agriculturally Incompatible Uses. See "Incompatible Uses: Agricultural"

Agriculture. The use of land for agricultural purposes, including farming, dairying, pasturage agriculture, horticulture, floriculture, viticulture, and animal and poultry husbandry; and related accessory uses for packing, treating, or storing of produce or animal products that are secondary to normal agricultural activities.

Agriculture, Value-Added Product. A change in the physical state or form of an agricultural commodity including but not limited to making apples into pie or cider, grapes into wine, or the production of jam from fruit for purposes of on-site or off-site sales, when such activities are consistent with Section 130.40.400 (Wineries), Section 130.40.260 (Ranch Marketing) in Article 4 (Specific Use Regulations) of this Title, and other applicable provisions of this Title. Any conversion of grapes or other agricultural products into alcoholic beverages shall be subject to all applicable state and federal permits and regulations.

Airport, Airstrips, and Heliports (Use Type)**.** A place where aircraft take off or land, whether on land or water, or for agricultural purposes such as crop dusting but does not include places where aircraft land and take off solely for emergency purposes. It may include land improved and intended for aircraft storage, cargo, passengers, airport and airspace control facilities, repairs, or refueling.

Airport Comprehensive Land Use Plan (ACLUP). The document prepared by the Airport Land Use Commission pursuant to Section 21675 of the Public Utilities Code that specifies land use and development policies to protect the safety and general welfare in the vicinity of county airports and to assure the safety of air navigation.

Airport Hazard. Any structure or natural growth that obstructs the navigable air space.

Airport Imaginary Surfaces. Surfaces established in relation to the end of each runway or designated takeoff and landing area, as defined in applicable Federal Aviation Regulations (Part 77). Such surfaces include imaginary approach, horizontal, conical, transitional, primary, and other surfaces. These surfaces are specifically described for each airport in the airport comprehensive land use plan (ACLUP).

Animal, Domestic Farm. Any of a number of animal species commonly reared or used for food, fur, herding, riding, or other similar uses, including but not limited to horses, cattle, sheep, herding dogs, goats, pigs, rabbits, poultry, fowl, ostriches, emus, and small fur-bearing animals not classified as exotic or wild (as defined in Title 6: Animals, Section 6.04.020: Definitions, of the County Code of Ordinances).

Animal, Exotic. Any bird, mammal, fish, amphibian, or reptile not normally domesticated in the state of California, as determined by the California Department of Fish and Game.

Animal Husbandry Project (Use Type)**.** The raising of farm or game animals such as cattle, horses, goats, sheep, hogs, chickens, rabbits, birds, etc., including but not limited to school, Grange, 4-H or Future Farmers of America (FFA) project.

Animal Keeping (Use Type)**.** The maintaining, keeping, feeding, and raising of animals. (See Section 130.40.080: Animal Raising and Keeping. (See also Subsection 130.40.160.C.13: Home Occupations - Horse Boarding, in Article 4: Specific Use Regulations, of this Title).

Animal Sales and Service (Use Type)**.** Establishments engaged in animal-related sales and services, as follows:

> **Kennel, Commercial.** Indoor and outdoor breeding and boarding of dogs, cats, and similar small animals, and dog training centers.
>
> **Pet Grooming and Pet Stores.** The sale of dogs, cats, rodents, fish, birds, and similar small animals, the sale of pet food and supplies, grooming services, and limited indoor boarding.
>
> **Veterinary Clinics.** A fully enclosed veterinary facility providing acute and long-term medical care for household pets and domestic farm animals. A clinic may include facilities for indoor boarding and grooming of dogs, cats and other small animals and incidental sale of pet food and supplies. (See also Section 130.40.070: Agricultural Support Services, in Article 4: Specific Use Regulations, of this Title).

Antenna. Any system of wires, poles, rods, reflecting discs or similar devices used for the transmission or reception of electromagnetic waves when such system is either external to or attached to the exterior of a building or structure. (Ord. 4589, 2001) (See also Section 130.40.130: Communication Facilities, in Article 4: Specific Use Regulations, of this Title).

Apartment. See "Dwelling, multi-unit"

Appeal. A formal request by the applicant or interested party for the review authority to reconsider and either uphold or overturn the decision of an earlier review authority, in compliance with Section 130.52.090 (Appeals) in Article 5 (Planning Permit Processing) of this Title.

Arbor. See "Structure"

Artificial Slope. A slope created as a result of grading that is allowed under a grading permit, or for which a permit was not required at the time the slope was created.

Automotive and Equipment (Use Type)**.** Establishments that are primarily engaged in sales or services for automobiles, motor vehicles, trucks, small engines, or heavy equipment. The following are Automotive and Equipment use types:

> **Fuel Sales.** The retail sale of petroleum products and other motor vehicle fuels. Fuel Sales may be combined with uses such as "Restaurants" and "Retail Sales and Service" if those uses are otherwise allowed in the zone.
>
> **Paint and Body Shops.** The repair and painting of motor vehicle, aircraft, and similar vehicle bodies.
>
> **Repair Shops:**
>
> > **Automotive.** The repair and servicing of motor vehicles, construction equipment, farm machinery, aircraft, boats, automobile and heavy equipment repair garages, muffler shops, car stereo installation, car wash and detailing services. These uses may not include fuel sales, or body repair and/or painting.
> >
> > **Equipment.** It also includes facilities that repair small engines such as chain saws, lawn mowers, and other gasoline powered gardening equipment or other uses that test or demonstrate equipment outside a building.
>
> **Sales and Rental.** The sales or rental from the premises of automobiles, trucks, heavy construction equipment, motorcycles, recreational vehicles, trailers, farm machinery, aircraft, or boats, and may include sales of parts and repair services. Does not include repair, bodywork, and painting.
>
> **Vehicle Storage.** The service and storage of operable vehicles, boats and trailers. Typical uses include recreational vehicle storage lots, fleet storage lots, impound lots, and construction vehicle storage areas. It also includes storage of vehicles incidental to a commercial use, such as delivery, taxicab, and towing services.
>
> **Wrecking/Dismantling Yard.** See "Salvage and Wrecking Yard"

Avalanche. A type of landslide involving unstable snow pack, which could include rock, vegetation, and other matter that is swept along with the swiftly moving snow.

Bake Shop (Use Type)**.** See "Ranch Marketing"

Bank and Financial Services (Use Type)**.** Institutions such as banks, lending institutions, trust companies, credit agencies, brokers and dealers in securities and commodity contracts, investment companies, vehicle finance agencies, and similar financial services.

Bars and Drinking Establishments (Use Type)**.** Establishments such as bars, taverns, pubs, stand-alone tasting rooms, and similar establishments where alcoholic beverages are sold and consumed on-site, where any food service is subordinate to the sale of alcoholic beverages. Uses may include indoor entertainment such as live music and dancing.

Bed and Breakfast Inns (Use Type)**.** See Lodging Facilities (Subsection 130.40.170.D: Bed and Breakfast Inns, in Article 4: Specific Use Regulations, of this Title).

Biological Resources Assessment. An assessment prepared for a discretionary project by a qualified biologist or other professional to identify potential impacts to biological resources and to identify feasible alternatives or mitigation measures to reduce potentially significant effects.

Breweries:

> **Large Commercial** (Use Type)**.** A facility, for the brewing and bottling of beer, that typically produces more than 15,000 barrels per year without on-site consumption facilities.
>
> **Micro Brewery** (Use Type)**.** A facility, for the brewing and bottling of beer, that typically produces less than 15,000 barrels of beer per year with 75 percent or more of its beer sold off-site, and allows direct consumer sales through carryout and/or on-site tap-room or restaurant consumption.
>
> **Brewpub** (Use Type)**.** A restaurant-brewery that sells 25 percent or more of its beer on-site. The beer is brewed primarily for sale in the restaurant and bar.

Broadcasting and Recording Studios (Use Type)**.** Commercial and public communication uses such as telegraph, telephone, radio and television broadcasting and receiving stations; and television production and sound recording studios when entirely enclosed within buildings. This does not include towers, antennas, or reflectors that are defined under Communications Facilities.

Building Codes. The most recent version of the California Building Standards Code, found in California Code of Regulations, Title 24, together with local amendments, if any, adopted by the Board.

Building Supply Stores (Use Type)**.** The indoor and outdoor retail sales of lumber and other large building supplies, including paint, glass, fixtures, and similar building or construction material. Can also include accessory sales of lawn and garden supplies and nursery stock.

Business Support Services (Use Type)**.** Establishments providing other businesses with services associated with ongoing business operations. Typical uses include blueprinting, business equipment repair, computer services, small equipment rental (indoor), film processing, advertising services, and photocopying.

Cabana. See "Pool house"

California Environmental Quality Act (CEQA). Those statutes set forth in the California Public Resources Code Section 21000 et seq. The "CEQA Guidelines" are set forth in the California Code of Regulations (CCR), Title 14, Section 15000 et seq.

Campground (Use Type)**.** Any area or tract of land where one or more lots or campsites are rented or leased, or held out for rent or lease, to accommodate tents, trailers, cabins, yurts, dormitories and RV's for transient occupancy (30 days or less), whether or not individual sewer hookups are available to individual campsites *(CCR Title 25, Sec. 2002)*. (See also Section 130.40.100: Campgrounds and Recreational Vehicle Parks, in Article 4: Specific Use Regulations, of this Title).

Camping, Temporary (Use Type)**.** A single campsite for self-contained camping of a limited duration, only. No accessory accommodations such as restrooms, dining, or laundry facilities are offered on the site.

Campsite. An area within a campground occupied by a person or a group. (See also Section 130.40.100: Campgrounds and Recreational Vehicle Parks, in Article 4: Specific Use Regulations, of this Title).

Caretaker Unit (Use Type)**.** A permanent or temporary housing unit used for caretakers employed on the site of a non-residential use where 24-hour security or monitoring of facilities or equipment is necessary that is secondary or accessory to the primary use of the property. (See also Section 130.40.120: Commercial Caretaker, Agricultural Employee, and Seasonal Worker Housing, in Article 4: Specific Use Regulations, of this Title).

Casita. See "Guest House" or "Secondary Dwelling"

Catering. Use of a commercial kitchen for the preparation of food to be served to the public either on or off-site.

Cemeteries (Use Type)**.** Burial grounds, columbaria, and mausoleums. Does not include mortuaries or funeral homes. (See also "Funeral and Internment Services")

Child Day Care Center (Use Type)**.** Any child day care facility other than a day care home, including infant centers, preschools, extended day care facilities, and school age child care

centers. (See also Section 130.40.110: Child Day Care Facilities, in Article 4: Specific Use Regulations, of this Title).

Child Day Care Facility. A facility that provides nonmedical care to children under 18 years of age in need of personal services, supervision, or assistance essential for sustaining the activities of daily living or for the protection of the individual on less than a 24-hour basis. Child day care facilities include day care homes, day care centers, and employer-sponsored day care centers.

Child Day Care Home (Use Type)**.** A residential dwelling that regularly provides care, protection, and supervision for 14 or fewer children, in the provider's own home, for periods of less than 24 hours per day, while the parents or guardians are away, and is either a large family day care home or a small family day care home, as follows:

> **Large Family Day Care Home.** A home that provides family day care for 9 to 14 children, inclusive, including children under the age of 10 years who reside at the home, as set forth in California Health and Safety Code, Section 1597.465.
>
> **Small Family Day Care Home.** A home that provides family day care for 8 or fewer children, including children under the age of 10 years who reside at the home, as set forth in California Health and Safety Code, Section 1597.44. (See also Section 130.40.110: Child Day Care Facilities, in Article 4: Specific Use Regulations, of this Title).

Christmas Tree Sales Lot (Use Type)**.** Temporary facilities for the sale of Christmas trees and related merchandise, not located on the site of a Christmas tree farm. (See also "Seasonal Sales")

Churches and Community Assembly (Use Type)**.** Facilities and activities typically carried on at public and quasi-public meeting areas, including but not limited to places of worship, public and private non-profit meeting halls, public community indoor or outdoor recreation facilities, and community centers.

Co-location. The placement of multiple antennae on a single structure, pole, or tower by different communication providers. (See also Section 130.40.130: Communication Facilities, in Article 4: Specific Use Regulations, of this Title).

Commercial Caretaker Housing. See "Employee Housing: Commercial Caretaker"

Commercial Facility. Any structure, building, or property used primarily for the exchange or manufacture of goods and services.

Commercial Kitchen. A food preparation facility (See also "Kitchen") that is intended to provide food to the public, including customers, guests, or the general public, for on-site or off-site consumption, that complies with the California Health and Safety Code requirements and is permitted by Environmental Management.

Commercial Recreation (Use Type)**.** Establishments engaged in providing recreation and entertainment activities for participants and spectators. This use may include secondary and incidental retail sales and food services. The following are Commercial Recreation use types:

Arcade. Places open to the public where four or more coin operated amusement devices are installed, including establishments where the primary use is not devoted to the operation of such devices.

Indoor Entertainment. Predominantly spectator uses conducted within a building, typical uses include concert halls, community assembly, museums, and dance halls.

Indoor Sports and Recreation. Predominantly participant sports and recreation activities conducted within a building, typical uses include bowling alleys, skating rinks, indoor racquetball courts, gymnasiums, indoor batting cages and sport courts, athletic and health clubs.

Large Amusement Complex. Theme park or similar complex which exceeds two acres in size and which includes outdoor amusement attractions such as mechanized or carnival rides or water slides.

Outdoor Entertainment. Predominantly spectator uses conducted outside of or partially within a building, typical uses include amphitheaters, sports arenas, race tracks, and zoos.

Outdoor Sports and Recreation. Commercially operated, predominantly participant sports and recreation activities conducted wholly or partially outside of a building, including, but not limited to golf courses, tennis courts, swimming pools, outdoor batting cages, shooting and archery ranges, ball fields, and sport courts and courses.

Communication Facilities (Use Type)**.** Communication facilities, not including home televisions and radio receiving antennas, satellite dishes, or communication facilities for community services provide by a public agency are wireless communication facilities including transmission and relay towers, dishes, antennas, and other similar facilities. (See also Section 130.40.130: Communication Facilities, in Article 4: Specific Use Regulations, of this Title).

Community Care Facility (Use Type)**.** Any facility, place, or building that is maintained and operated to provide nonmedical residential care, day treatment, adult day care, or foster family agency services for children, adults, or children and adults, subject to licensing by the State Department of Social Services, Health and Welfare Agency. Such facilities typically serve the physically disabled, mentally impaired, incompetent persons, and abused or neglected children. Facilities included in this definition are listed under California Health and Safety Code (HSC), Section 1502.a.1-a.12 and 1502.3, and include, but are not limited to, residential facilities and foster family homes. Excluded from this definition are any house, institution, hotel, homeless shelter, or other similar place that supplies board and room only, or room only, or board only, provided that no resident thereof requires any element of

care. Also excluded are recovery houses or similar facilities providing group living arrangements for persons recovering from alcoholism or drug addiction where the facility provides no care or supervision or where the facility provides alcohol and/or drug recovery treatment or detoxification services *(HSC 1505, 11834.02)*.

Community Services (Use Type)**.** Facilities and uses provided by public agencies for the community health, safety, and welfare. Community Services are divided into the following categories:

> **Intensive.** Services that may have the potential to cause impacts from noise, lights, odors, or the use of hazardous materials, such as sheriff substations, fire stations, correctional facilities, and landfill transfer stations.
>
> **Minor.** Services such as post offices, libraries, museums, cultural centers, living history facilities and government offices.

Concurrent Applications. Multiple applications for the same project that are processed together, and reviewed and approved, or disapproved, by the review authority.

Contractor's Office. A temporary office for contractors engaged in construction projects that is used either on the construction site or off-site during the course of construction. (See also Section 130.40.190: Mobile/Manufactured Homes, in Article 4: Specific Use Regulations, of this Title).

Convenience Zone. For purposes of locating a certified recycling center, the area within one-half mile radius of a supermarket meeting the definition under the California Public Resources Code Section 14526.5.

Cooking Facilities. Any area within a structure that contains the following: a gas or electric range, stove top and/or oven (not including a microwave oven), or a space that can accommodate the range or stove top and oven; a refrigerator greater than five cubic feet in size; and a standard-sized kitchen sink.

Cottage Food Operation. A food processing facility, as defined in California Health and Safety Code Sections 109947 and 113758, at a private home where low-risk "non-potentially hazardous" food products are prepared or packaged for sale to consumers, that is registered or has a permit pursuant to California Health and Safety Code Section 114365. A cottage food operation shall meet all state registration and permit requirements for cottage food operations.

Coverage. See "Lot Coverage"

Covenants, Conditions and Restrictions (CC&Rs). A set of rules, covenants, or deed restrictions commonly called "CC&Rs," that governs the use of real estate, usually enforced by a homeowners' association.

Crop Production (Use Type)**.** Agricultural and horticultural uses including but not limited to production of grains, field crops, vegetables, fruits, nut trees, herbs, flowers and seed production, nursery stock and ornamental plant production (including those plants, trees, shrubs, and ground covers grown in containers, green houses, shade structures, under cover and in the ground), tree and sod farms, associated crop preparation services and harvesting activities including but not limited to, mechanical soil preparation, irrigation system construction, spraying, harvesting and sales of the agricultural crop only.

Cross-visibility Area (CVA)**.** For motorist safety purposes, the triangular area that is to be maintained free of impacts to line of sight visibility. (See also Section 130.30.070.B: Fences, Walls, and Retaining Walls – Front Yards, in Article 3 (Site Planning and Project Design Standards, of this Title).

Custom Farm Services (Use Type)**.** An agricultural management business that could provide a variety of agricultural services including but not limited to planting, pruning, harvesting, irrigation services, integrated pest management, equipment services, and agricultural labor.

Dairy. A place where three or more cows or goats are maintained for the purpose of producing milk or other dairy products for sale.

Density. The number of dwelling units per unit of land.

Development Plan. The written and graphic materials required for review of a planned development, including but not limited to a written description of the development, a plat of subdivision, all covenants relating to use, location, and bulk of buildings and other structures, intensity of use or density of development, streets, walkways, landscaping, and parking facilities, and any other similar material necessary for consideration by the review authority. (See also Section 130.52.040: Development Plan Permit, in Article 5 (Planning Permit Processing) in this Title).

Development Project. A project undertaken for the purpose of development of land that requires the issuance of a discretionary or ministerial approval or permit, including a permit for construction or reconstruction.

Dining Facility (Use Type)**.** See "Ranch Marketing"

Distillery (Use Type)**.** A place where fortified alcoholic liquors such as whiskey, vodka, and brandy are made through the distillation process.

Domestic Farm Animal. See "Animal: Domestic Farm"

Drive-through Business. Any portion of a building or structure from which business is transacted or is capable of being transacted directly with customers located in a motor vehicle.

Dwelling (Use Type)**.** A building or portion thereof used exclusively for residential purposes that constitutes an independent living unit, that has interconnected sleeping, eating, and sanitation facilities, but not more than one kitchen; and is occupied or intended for use by one household on a long-term basis of more than 30 days. Dwellings may be structures, or modular or mobile units placed on a foundation. Types of dwelling units are further defined as follows:

> **Multi-unit Residential.** A structure designed and intended for occupancy by two or more households living independently of each other, each in a separate dwelling unit, that may be owned individually or by a single landlord. This use includes apartments, condominiums, and co-op housing units.
>
> **Single-unit Residential.** A structure designed exclusively for occupancy by one household. This use type includes both attached and detached dwelling units as defined below:
>
>> **Attached.** Single-unit residential structures attached to another residential unit where one or more walls, extending from foundation to roof, separate it from adjoining units to form a lot line. Each unit shall have separate kitchen, plumbing, and heating systems. This use includes townhouses, row houses, and half-plexes.
>>
>> **Detached.** Single-unit residential structures not attached to any other residential unit**.** This use includes mobile homes and modular units.

Emergency Shelter (aka "Homeless Shelter") (Use Type)**.** Housing with minimal supportive services for homeless persons within the County that are limited to occupancy on an emergency (not to be confused with disaster) and temporary basis of six months or less. *(California Health and Safety Code, Section 50801)*

Employee Housing (Use Type)**.** One or more dwelling units permitted under California Health and Safety Code Section 17021.5 et seq, to serve as living accommodations for employees and their immediate families. (See also Sections 130.40.120: Commercial Caretaker, Agricultural Employee, and Seasonal Worker Housing and 130.40.190: Mobile/Manufactured Homes, in Article 4: Specific Use Regulations, of this Title). Types of Employee Housing are further defined as follows:

> **Agricultural.** For the exclusive use of employees hired to assist in agricultural operations either on the same premises or off-site.
>
> **Commercial Caretaker.** For the exclusive use of an employee hired for security purposes on the same premises as a commercial, industrial and recreational or civic use.

Construction. For the exclusive use of employees hired to work on construction projects in remote areas, during the duration of the construction activities, where permanent housing is infeasible and temporary housing is unavailable.

Seasonal Worker. For the exclusive use of employees hired to assist in recreational operations that are seasonal and, by their nature, located in rural areas deficient in rental housing.

Employer-sponsored Child Day Care Center (Use Type)**.** Any child day care facility at the employer's site of business operated directly or through a provider contract by any person or entity having one or more employees, and available exclusively for the care of children of that employer, and of the officers, managers, and employees of that employer. (See also Section 130.40.110: Child Day Care Facilities, in Article 4: Specific Use Regulations, of this Title).

Equivalent Occupancy. The number of persons that can occupy a building or use where fixed seating does not exist.

Farm Machinery and Equipment, Sales & Maintenance (Use Type)**.** The repair, alteration, and finishing of farm machinery and equipment or other products on the same site as the retail sales of such farm machinery and equipment as a service to purchasers. The wholesale or retail sale of such products could be a primary or accessory use.

Farmers' Market (Use Type)**.** The temporary use of an off-site location for the sale of food and farm produce, nursery plants and flowers, and handicrafts by multiple vendors that is usually conducted from parked vehicles or accessory display tables. (See also Section 130.40.220: Outdoor Retail Sales, in Article 4: Specific Use Regulations, of this Title).

Certified Farmer's Market (Use Type)**.** A location approved by the Agricultural Commissioner of that county where agricultural products are sold by producers or certified producers directly to consumers or to individuals, organizations, or entities that subsequently sell or distribute the products directly to end users. A certified farmer's market may only be operated by one or more certified producers, by a nonprofit organization, or by a local government agency. (CCR 1392.2(a)) (See also Section 130.40.220: Outdoor Retail Sales, in Article 4: Specific Use Regulations, of this Title).

Farmland Conservation Contract. Contracts establishing agricultural preserves and zones in compliance with the California Land Conservation Act of 1965 (Williamson Act) and farmland security zone legislation under California Government Code Chapters 51200 and 51296-51297, respectively. (See also Section 130.40.060: Agricultural Preserves and Zones: Contracts, Criteria, and Regulations, in Article 4: Specific Use Regulations, of this Title).

Federal Endangered Species Act. Those federal statutes found at 16 United States Code (USC) 1531 et seq. and their implementing regulations.

Feed and Farm Supply Store (Use Type)**.** An establishment primarily engaged in selling or renting agricultural machinery, equipment, and supplies for use in soil preparation and maintenance, the planting and harvesting of crops, and other operations and processes pertaining to farming and ranching such as dairy equipment, frost protection equipment, hay, grain and feed sales, poultry, pet, equine and livestock products, irrigation equipment, packaged fertilizer, packaged agricultural sprays, livestock equipment, and poultry equipment. Sales may include the final assembly of farm machinery, implements or equipment from component parts received from the manufacturer in a partially assembled state, but not the creation of such components from raw materials. The sale of agricultural machinery does not include trailers, tractors and other motorized, self-propelled farm vehicles, which are included under "Farm Machinery and Equipment, Sales & Maintenance".

Feed Lot. A permanent, enclosed area where livestock, particularly cattle or hogs, are gathered to be fattened before being slaughtered for food. A feed lot does not include barns and adjacent corrals, pastures, or locations used for livestock roundup, livestock auctions, or temporary holding areas for livestock.

Fire Code. The current effective edition of the California Fire Code, (found at Part 9, Title 24, California Code of Regulations) including local amendments, if any, adopted by the local fire district(s) and ratified by the Board. (See also "Fire Safe Regulations").

Fire Safe Regulations. The regulations adopted by the Board, and ratified by the State Board of Forestry and Fire Protection, pursuant to Public Resources Code Sections 4290 and 4291, California Code of Regulations, Title 14, Section 1270 – 1299 inclusive.

Floor Area. See "Gross Floor Area"

Food and Beverage Retail Sales (Use Type)**.** Establishments primarily engaged in the retail sale of food and beverages for off-site consumption. Typical uses include grocery stores, liquor stores, and specialty food stores.

Food Stand (Use Type)**.** See "Ranch Marketing"

Free Food Distribution Center (Use Type)**.** A location where food is distributed to the general public without payments or consideration.

Funeral and Internment Services (Use Type)**.** Establishments engaged in providing services involving the care, preparation or disposition of human dead. Typical uses include funeral parlors, crematories, and mortuaries, but do not include cemeteries.

Garage. Enclosed parking space for storage of motor vehicles.

Golf Course (Use Type)**.** Publicly and privately owned golf courses open to the general public. Minor accessory uses such as pro shops and snack bars intended to serve the golfers may be considered a part of the golf course facility. Restaurants, banquet and reception

facilities, and other commercial uses commonly associated with golf courses shall be considered separate use types.

Grazing (Use Type)**.** The raising and feeding of domestic farm animals where the primary source of food is the vegetation grown on the site, including irrigated and non-irrigated pastures.

Gross Floor Area (GFA)**.** The sum of the total horizontal areas of the several floors of all buildings on a lot, measured from the exterior faces of the walls, including basements; elevator shafts; stairwells at each story; floor space used for mechanical equipment with structural headroom of six feet, six inches or more; penthouses; interior balconies; and mezzanines. For the purpose of measurement of residential floor area, gross floor area shall be exclusive of any garage or carport.

Gross Acreage. Acreage calculation that includes the entire site or project area and used to calculate gross density.

Guest House (Use Type)**.** An accessory residential structure intended for the temporary and occasional housing of a visitor(s) to the primary residents that does not contain a kitchen. (See also Section 130.40.150: Guest House, in Article 4: Specific Use Regulations, of this Title).

Guest Ranch (Use Type)**.** See "Lodging Facilities"

Handicrafts. (Use Type) See "Ranch Marketing"

Hazardous Material Handling (Use Type)**.** All industrial uses engaged in the handling of substances subject to the maintenance of a "Risk Management Prevention Program" under California Health and Safety Code Section 25534. Typical uses include semiconductor manufacturing and electroplating.

Health Resort and Retreat Center. See "Lodging Facilities"

Hiking and Equestrian Trails (Use Type)**.** Trails designed for non-motorized recreation, such as hiking, horseback and bicycle riding, and cross-country (Nordic) skiing.

Historic Structure. See "Structure: Historic"

Home Occupation (Use Type)**.** A business operated out of a residential dwelling or accessory structure or outdoors on the residential parcel, by a resident of the premises, and that is compatible with surrounding residential and agricultural uses. Home occupations may include, but are not limited to, work performed by telephone, mail, or by internet, or appointment; home offices; Cottage Food Operations (CFO), small scale production and repair, handicrafts, parts assembly; or work or craft that is the activity of creative artists, music teachers, academic tutors, trainers, or similar instructors. (See also Section 130.40.160: Home Occupations, in Article 4: Specific Use Regulations, of this Title).

Hunting/Fishing Club or Farm (Use Type)**.** Privately operated areas for the pursuit of fish and game species.

Hunting/Fishing Club or Farm Facility (Use Type)**.** Privately operated areas and facilities for the pursuit of fish and game species that include day uses and overnight accommodations.

Incompatible Uses.

Agricultural. Those uses of land including, but not limited to, residential structures, nursing homes, schools, playgrounds, swimming pools, daycare centers, spas, ponds, and churches, which are apt to conflict with agricultural uses such as sprays, dust, odors, and noise**.** It also means those uses which are apt to cause conflict and threaten the viability of agricultural uses due to trespass, vandalism, theft, complaint, and dog-related problems. (See also Subsection 130.30.030.E: Special Setbacks for Agricultural and Timber Resource Protection, in Article 3: Site Planning and Project Design Standards, of this Title).

Mining. Uses that are inherently incompatible with mining or that require public or private investment in structures, land improvements, and landscaping and that may prevent or limit mining because of the greater economic value of the land and its improvements. It includes, but is not limited to, residential and commercial structures, schools, and playgrounds. (See also Subsection 130.30.030.F: Special Setbacks for Mineral Resource Protection, in Article 3: Site Planning and Project Design Standards, of this Title).

Industrial:

General (Use Type)**.** Manufacturing, processing, assembling, or fabricating from raw materials to include any use involving an incinerator, blast furnace, or similar industrial process and any industrial process conducted wholly or partially outdoors. It includes, but is not limited to lumber mills; batch plants; truss manufacturing; co-generation plants; food and byproducts processing plants; and fabric, textile, and carpet mills.

Specialized (Use Type)**.** Establishments engaged in activities that generate noise, vibration, odor, dust, or smoke that may extend beyond the confines of the property boundaries; that involve special safety or public health considerations; or that do not clearly fit within another industrial use classification. It includes, but is not limited to bulk storage of gasoline, propane, or other flammable fuel sources, and material recovery facilities.

Intermodal Facility (Use Type)**.** Facilities to support the transportation of persons, such as bus and train stations.

Junkyard. See “Salvage and Wrecking Yard”

Kennel (Use Type)**.** The keeping of five or more live domestic dogs or cats of at least four months of age (Title 6: Animals, Section 6.04.020: Definitions, of the County Code of Ordinances), under the following categories:

> **Commercial.** Indoor and outdoor boarding of dogs, cats, and similar small animals, and dog training centers. (See also "Animal Sales and Service").
>
> **Private.** Any building(s) or land designed or arranged for the care of dogs and cats belonging to the property owner that are kept for personal purposes of show, hunting, working, or as pets.

Kitchen. A room with cooking facilities or provisions for storage and preparation of food. (See also "Cooking Facilities").

Lake. A natural or manmade body that impounds water year round under normal conditions and of which the shoreline is primarily native earth or rock capable of supporting native or natural vegetation. This term does not include pools, ponds, or landscape features constructed of concrete or similar material that does not support vegetation.

Laundries, Commercial (Use Type)**.** Establishments engaged in high volume laundry and garment services, excluding self-service laundries. Typical uses include garment pressing and dry cleaning, linen supply, diaper service, industrial laundries, and carpet and upholstery cleaners.

Laundries, Self-service (Use Type)**.** A business that provides home-type washing, drying, or ironing machines for hire, to be used by customers on the premises. (See also "Retail Sales and Service").

Legal Lot. A lot which was: created or adjusted prior to March 4, 1972; or created by gift deed or grant deed between the dates of March 4, 1972 and October 10, 1983 where fewer than 5 parcels were created by the same owner from the original lot; or resulting from a division which created lots 40 acres or larger or not less than a quarter of a quarter section after March 4, 1972 but prior to January 7, 1992 where fewer than 5 parcels were created by the same owner from the original lot; or a Final or Parcel Map remainder created prior to January 1, 1980; or created in violation of the Subdivision Map Act or local ordinance and subsequently issued any permit or grant of approval for development; or created through a properly recorded Parcel Map or Final Map; or created through a county lot line adjustment; or where a certificate of compliance has been recorded.

Light Manufacturing (Use Type)**.** The manufacture, assembly, or packaging of products from previously prepared materials, such as cloth, plastic, paper, ceramic, metals, pre-cut wood, and wood products. It does not include saw and planning mill operations or manufacturing uses involving primary production of wood, metal, or chemical products from raw materials (See also "Industrial, General"). It includes, but is not limited to electronics and computer component assembly and cabinetmaking; but can include small-scale, artisanal

production of goods, such as soap, cheese, hand-loomed textiles and garments, ceramic products, lightweight nonferrous metal castings.

Livestock, High Density (Use Type)**.** The keeping and raising of domestic farm animals, such as cattle, horses, pigs, goats, sheep, rabbits, poultry, ostriches, and emus, for commercial purposes, where the primary source of food is other than the vegetation grown on-site.

Lodging Facilities (Use Type)**.** Establishments primarily engaged in the provision of commercial lodging on a transient basis (30 days or less) to the general public. Lodging may include the incidental provision of food, drink, sales, and services for the convenience of overnight guests. Types of lodging are further defined as follows:

> **Agricultural Homestays.** Lodging facilities operated by the resident of the property on which the facility is located that is accessory and subordinate to the on-site, bona fide agricultural or grazing operations. (See also Subsection 130.40.170.C: Agricultural Homestays, in Article 4: Specific Use Regulations, of this Title).
>
> **Agricultural and Timber Resource Lodging.** Lodging arrangements, accessory and subordinate to on-site commercial agricultural operations for the purpose of educating and informing the public about local foods, fiber, flowers or timber. (See also Subsection 130.40.170.C.2: Agricultural and Timber Resource Lodging, in Article 4: Specific Use Regulations, of this Title).
>
> **Bed and Breakfast Inn.** Any residence that provides guest rooms, without individual kitchens, for paying guests, as a transient lodging facility, where the owner resides on-site in either primary or secondary dwelling. (See also Subsection 130.40.170.D: Bed and Breakfast Inns, in Article 4: Specific Use Regulations, of this Title).
>
> **Guest Ranch** (Use Type)**.** A type of ranch facility engaged in agricultural tourism. The facility may be incidental to a working ranch, and may offer the following amenities and events: lodging and meals, overnight camping, horseback riding, cattle drives, rodeos, and other similar uses that are incidental to and compatible with ranching. (See also Subsection 130.40.170.C.3: Guest Ranch, in Article 4: Specific Use Regulations, of this Title).
>
> **Health Resort and Retreat Center**. Establishments engaged in recreational, educational, therapeutic, and similar activities, with day use or overnight facilities to serve the guests. The use differs from Commercial Recreation by being focused on self-improvement in a natural setting, although indoor facilities such as conference rooms, lodging, and dining facilities for the guests may be included. It includes, but is not limited to conference, retreat, or outdoor education centers, and health spas. (See also Subsection 130.40.170.E: Health Resort and Retreat Center, in Article 4: Specific Use Regulations, of this Title).

Hotels and Motels. Commercial lodging facilities that do not otherwise qualify as a Bed and Breakfast Inn.

Vacation Home Rental. Lodging provided to the general public in a private dwelling unit, where the unit is rented as a whole on a transient basis (30 days or less). (See Chapter 5.56: Vacation Home Rentals in Title 5 – Business Taxes, Licenses and Regulations).

Lot. An individual, legal parcel of land intended to be separately owned, developed, and otherwise used as a unit and does not include an administrative parcel used by the Assessor for tax purposes.

Lot Configurations.

Corner. A lot abutting on and at the intersection of two or more road easements or rights-of-way.

Flag. Lots that are approved with less frontage on a road easement or right-of-way than is normally required under the development standards for the zone and where the "flag pole" portion of the lot is used as an access corridor.

Through. A lot having its front and rear yards each adjoining a road easement or right-of-way.

Lot Coverage. A calculation of the area covered by all structures on a lot divided by the lot area. All coverage calculations shall include the area of a site covered by buildings or roofed areas, excluding projecting eaves, balconies, and similar allowed features.

Lot Dimensions.

Area. The measurement of the area formed within all property lines of a lot.

Depth. The average horizontal distance between the front and rear property lines.

Width. The horizontal distance measured between the side lot lines as described in Subsection 130.30.020.B (Measurement of Lot Width), in Article 3 (Site Planning and Project Design Standards), of this Title.

Lot Lines.

Front. The property line adjoining a road easement or right-of-way or that forms the centerline of such roadways.

Corner Lot. All property lines adjoining intersecting road easements or rights-of-way or forming the centerlines of such intersecting roadways are front lot lines.

Through Lot. The property line adjoining that roadway which provides the primary access is the front lot line when a non-vehicular access easement (NVA) is recorded on the opposite property line. When no NVA is recorded, both property lines shall be considered front lot lines.

Rear. The lot line not intersecting a front lot line that is most distant from and most closely parallel to the front lot line.

Side. Any lot line not a front or rear lot line.

Lot, Minimum Size. Minimum acreage or square footage of a lot required for its zone. (See also "Lot Dimensions: Area").

Maintenance and Repair (Use Type)**.** All uses that provide maintenance and repair of furniture, appliances, and equipment normally used within a building, exclusive of automotive repair. Typical uses include sewing machine, refrigerator, and upholstery repair.

Manufactured Homes. Residential structures that are constructed in a factory and which, since June 15, 1976, have been regulated by the federal Manufactured Home Construction and Safety Standards Act of 1974 under the administration of the U.S. Department of Housing and Urban Development (HUD). (See also Section 130.40.190: Mobile/Manufactured Homes, in Article 4: Specific Use Regulations, of this Title).

Marina (Use Type)**.** Facilities for the docking, mooring, or rental of boats to the public. Marinas are divided into the following categories:

Motorized Craft. Marinas serving motorized and non-motorized watercraft, including motorboats and personal watercraft. It may also include the sale of gasoline for use in watercraft.

Non-Motorized Craft. Marinas serving non-motorized watercraft only, such as sailboats, canoes, and rowboats.

Medical Services (Use Type)**.** Facilities that primarily provide medical or health care services. Medical Use types are further defined as follows:

Hospital. Facility that provides in-patient and out-patient medical, surgical, diagnostic, psychiatric, and emergency medical services. It includes, but is not limited to accessory out-patient radiology, laboratory, therapy and training, and pharmaceutical services.

Clinic. Facility that provides any combination of out-patient medical, diagnostic and minor emergency services; that may be open before and after typical medical office hours; and that generally accommodates walk-in patients.

Long Term Care Facility. Facilities that provides 24 hour supervised care serving seven or more persons. Typical uses include skilled nursing facilities, and extended and intermediate care facilities licensed by the State Department of Health Services.

Medical Office. See "Offices: Medical"

Mineral Exploration (Use Type)**.** Prospecting and exploratory activities for mineral resources where less than 1,000 cubic yards of material is disturbed.

Mineral Production (Use Type)**.** The processing of mineral resources extracted on-site or off-site. Processing includes rock crushing, stockpiling, aggregate washing, screening and drying facilities, and wholesale or retail distribution of mineral products.

Mining (Use Type)**.** The act or process of extracting resources, such as rock, sand, gravel, ores, coal, oil, clay, hydrocarbons, or mineral from the earth. The term also includes quarrying; excavating; drilling; well operation; milling, such as crushing, screening, washing and flotation; and other preparation customarily done at the mine site or as part of a mining activity. Mining excludes any activity associated with grading, excavation, or construction of public or private improvements. Mining does not include "recreational mining/ prospecting" as defined below. Mining use types are divided into the following categories:

Recreational Mining/Prospecting. The extraction of minerals for personal recreation and the use of such devices as pans, rockers, and dredges with intakes eight inches in diameter or less.

Subsurface Mining. The act of mining operations that are conducted below the surface of the ground except for surface access, and vent and escape shafts.

Surface Mining. All, or any part of mining operations that involve the removal of overburden and mining directly from the mineral deposit, open-pit mining of naturally exposed mineral, mining by the auger method, dredging and quarrying, or surface work related to a subsurface mine. (See also Chapter 130.29: Mineral Resource (-MR) Combining Zone, Exploration, Mining, Reclamation, and Protection, in Article 2 (Zones, Allowed Uses, and Zoning Standards, in this Title).

Mixed Use Development. Properties on which various uses, such as office, commercial, institutional, and residential, are combined in a single building or on a single site in an integrated development project with significant functional interrelationships and a coherent physical design. A "single site" may include contiguous properties, and shall include separate lots created for commercial and residential components. (See also Section 130.40.180: Mixed Use Development, in Article 4: Specific Use Regulations, of this Title).

Mobile/Manufactured Home Park (Use Type)**.** Any site that is improved to accommodate two or more mobile or manufactured homes used for residential purposes, on which the underlying land is rented or leased. This term excludes a single-unit residential lot on which a mobile/manufactured home is placed either as a primary dwelling, secondary dwelling, or

temporary mobile home in compliance with Section 130.52.050 (Temporary Mobile Home Permit), in Article 5 (Planning Permit Processing) of this Title. It includes sites that were converted from rental or lease to a subdivision, cooperative, or condominium complex. (See also Section 130.40.190: Mobile/Manufactured Homes, in Article 4: Specific Use Regulations, of this Title).

Mobile/Manufactured Home Sales Lots (Use Type)**.** Retail sales establishments providing outdoor display of mobile or manufactured homes for sale to the public.

Model Home(s). House(s) in a residential subdivision that are open for view to prospective buyers as a marketing tool for similar floor plan(s) within the development. Said model home(s) may or may not be furnished and decorated.

Monopole. A structure of single pole (non-lattice) design erected on the ground to support telecommunications antennae and connection appurtenances (Ord. 4589, 2001). (See also Section 130.40.130: Communication Facilities, in Article 4: Specific Use Regulations, of this Title).

Natural Resources. Naturally occurring materials, such as minerals, timber, water sources, vegetation, and agriculturally productive soils that can be used or developed to provide a personal, common, or public benefit.

Net Acreage. The remaining area within a development lot or subdivision after deleting all portions for proposed and existing public roadways.

Nuisance. Any use or structure which is injurious to health and safety, or is indecent or offensive to the senses, or an obstruction to the free use of property so as to interfere with the comfortable enjoyment of life or property, or unlawfully obstructs free passage or use, in the customary manner, of any navigable lake or river, bay, stream, canal, or basin or any public park, square, street, or highway. For the purpose of enforcement of the provisions of this Title, the Director or his designee, subject to appeal, shall make the determination whether a use constitutes a nuisance as defined herein.

Nursery, Plants (Use Type)**.**

> **Production and Wholesale.** A type of "Crop Production". Production of all types of nursery stock and ornamental plants with no accessory sales of non-plant products. (See also "Crop Production").
>
> **Plant Production Plus.** Commercial establishments engaged in buying, displaying and selling containerized and non-containerized nursery stock produced primarily on-site plus non-plant nursery products as an accessory use to the primary use. Such nursery operations may involve the application of fertilizers, pesticides, herbicides, as well as other appropriate agricultural practices.

Commercial Retail. Commercial establishments engaged in the sale of ornamental plants, other nursery products, grown under cover or outdoors, garden accessories, garden equipment, and garden or landscaping supplies.

Offices (Use Type)**.**

Medical. Establishments engaged in providing out-patient personal health services including prevention, diagnosis, treatment, or rehabilitation by health professionals. Typical uses include, but are not limited to, offices for physicians, dentists, physical therapists, chiropractors, and medical or dental laboratories.

Professional. Establishments engaged in providing services such as accounting and bookkeeping services, advertising agencies, architectural and engineering services, attorneys, data processing and computer services, secretarial services, administrative offices, insurance agencies, real estate agencies, public relations, and consulting firms, photography and commercial art studios, telecommuting centers, and writers' offices.

Off-Highway or Off-Road Vehicle Recreation Area (Use Type)**.** Any area where motorized vehicles are driven for recreational use or for competitive speed or skill events, of which all or a portion of the vehicular use is conducted outside of road easements or public rights-of-way. Typical uses are off-road vehicle parks, go-cart tracks, and motocross or snowmobile courses.

Open Space. Any lot or area of land or water that is essentially unimproved and devoted to the preservation of natural resources; the managed production of resources; outdoor recreation, and/or public health and safety. Types of open space are further defined as follows:

Common. Open space within a development plan that is designated and intended for the use or enjoyment of all of the owners or occupants of the development. Common open space may contain such complementary structures and improvements as are necessary, desirable, or appropriate for the benefit and enjoyment of the owners or occupants of the development. Ownership of common open space is held by a homeowners association or similar organization and access is usually restricted to property owners and residents of the development and their guests. (See also "Private Recreation Area").

Public. Open space which is available to the general public, such as parks, wildlife habitat, and natural resource conservation areas. Public open space is typically, but not necessarily, owned and managed by a governmental agency that may restrict public access to further its management goals.

Orchards and Vineyards: Commercial (Use Type)**.** The cultivation of fruit trees, nut trees, or grape vines for the commercial sale of their agricultural produce.

Ordinary High Water Mark. The line on the shore in non-tidal areas established by the fluctuations of water and indicated by physical characteristics such as a clear, natural line impressed on the bank; shelving; changes in the character of soil; destruction of terrestrial vegetation; the presence of litter and debris; or other appropriate means that consider the characteristics of the surrounding area. (See also Subsection 130.30.030.F: Protection of Wetlands and Sensitive Riparian Habitat, in Article 3: Site Planning and Project Design Standards, of this Title).

Outdoor Retail Sales. See "Retail Sales and Service – Outdoor"

Packing (Use Type)**.** The handling of fruit, grain, vegetables, trees, and other crops to ready it for shipping and sales without changing the nature of the product. Types of packing are further defined as follows:

> **On-site Products.** The handling of agricultural products produced on the same lot of land which the packing facility is located, or on adjacent lots under the same ownership, lease, or management.
>
> **Off-site Products.** The handling of agricultural products produced on a lot of land different from that on which the packing facilities are located.

Panel Antenna. Flat, conical or round surface receiving and/or transmitting device typically covering one of three 120-degree sectors, and used to concentrate a radio signal into or from that sector. (Ord. 4589, 2001.) (See also Section 130.40.130: Communication Facilities, in Article 4: Specific Use Regulations, of this Title).

Parking Lot, Public (Use Type)**.** Publicly and privately owned and operated areas available for general public use for the parking of motor vehicles including park and ride lots, leased parking, and hourly or daily parking.

Parks (Use Type)**.** Areas dedicated and used for passive and active recreation operated by a public agency and open to the public. Typical uses are playgrounds, ball fields, and picnic areas. Parks are divided in the following categories:

> **Day Use.** Parks intended for use only during daylight hours. It precludes lighting for ball fields and play structures except as may be necessary for public safety or security purposes.
>
> **Nighttime Use.** Parks designed and intended for activities to be carried on after sunset, such as lighted ballfields and tennis courts.

Personal Services (Use Type). See "Retail Sales and Service"

Picnic Area (Use Type)**.** Areas providing picnic tables and other facilities for day use outdoor eating, either as a primary use or accessory to other use types.

Planned Development. Land under unified control to be planned and developed as a whole in a single development operation or as a programmed series of development operations or phases. A planned development is built according to general and detailed development plans that include not only streets, utilities, lots, and building locations, but also construction, use, and relationships of buildings to one another, and plans for other uses and improvements on the land, such as common or public open space areas. A planned development includes a program for the provision, operation, and maintenance of such areas, facilities, and improvements that will be provided for common use by the occupants of the planned development or for use by the general public, if applicable. (See also Chapter 130.28: Planned Development, in Article 2 (Zones, Allowed Uses, and Zoning Standards, of this Title).

Pool House (or Cabana). A residential accessory structure associated with a private swimming pool, containing changing area(s) and restroom facilities, but which does not contain sleeping quarters or cooking facilities, and is not intended for permanent occupancy.

Printing and Publishing (Use Type)**.** Establishments engaged in printing by letterpress, lithography, engraving, screen, offset or similar process, but not including xerographic copying and other "quick printing" services. It also includes the publishing of newspapers, books, and periodicals where the printing is done on the premises.

Private Recreation Area (Use Type)**.** Recreational facilities owned and operated by a homeowners' association or similar entity for the benefit of property owners within a subdivision or multi-unit residential complex. It may include, but is not limited to, swimming pools, indoor or outdoor sport courts, meeting rooms, clubhouse, and any facilities required to maintain said recreation areas.

Processing of Agricultural Products; Commercial (Use Type)**.** The handling of agricultural products whereby the nature of the product is changed or altered, such as making juices, jams, and sauces from fruit, and the slaughtering of animals raised on the premises or on land in the vicinity under common ownership. This use type does not include Cottage Food Operations (CFO) or the processing of grapes and other fruit juice into wine. (See also "Cottage Food Operation" or "Winery").

Produce Sales (Use Type)**.** The public sale of agricultural products grown on or off-site. (See also Section 130.40.240: Produce Sales, in Article 4: Specific Use Regulations, of this Title).

Produce Stand. Producer owned and operated facility for the sale of produce grown on the same site or as part of a shared multi-farm operation. (See also Section 130.40.240: Produce Sales, in Article 4: Specific Use Regulations, of this Title).

Public Utility Infrastructure. Public utility towers and structures supporting power lines of 50 kilovolts (kV) potential and greater, trunk telephone lines and supporting structures, sewer and water lines of 12 inches or more inside diameter, natural gas pipe of six inches or more inside diameter, sewer and water lift stations, telephone equipment buildings, and natural gas

storage and distribution facilities. (See also Section 130.40.250: Public Utilities, in Article 4: Specific Use Regulations, of this Title).

Public Utility Service Facilities (Use Type)**.** Facilities necessary to provide the community with power, water, sewage disposal, telecommunications, and similar services. Public Utility Service Facilities are divided in the following categories: (See also Section 130.40.250: Public Utilities, in Article 4: Specific Use Regulations, of this Title).

Intensive. Service Facilities that may have the potential to cause impacts from noise, lights, odors, or the use of hazardous materials, such as electrical receiving facilities or substations, sewage treatment facilities, and power generating facilities.

Minor. Service facilities such as water, sewer, gas pipelines, and pump stations; telephone and electrical distribution lines 12 kilovolts (kV) or less; and drainage facilities.

Qualified Professional. A professional specializing in any of the following categories of natural sciences:

Certified Arborist. A person certified by the International Society of Arboriculture (ISA), American Society of Consulting Arborists (ASCA), or other recognized professional organization of arborists who provides professional advice and is a licensed professional to do physical work on trees.

Certified Rangeland Manager. A person licensed by the State of California through the California State Board of Forestry who applies scientific principles to the art and science of managing rangelands and is recognized by the California Section of the Society for Range Management as meeting the education, experience, and ethical standards for professional rangeland managers.

Qualified Biologist. A person who has a BA/BS or advanced degree in biological sciences or other degree specializing in the natural sciences; professional or academic experience as a biological field investigator; taxonomic experience and knowledge of plant and animal ecology; familiarity with plants and animals of the area including species of concern; and familiarity with the appropriate county, state, and federal policies and protocols relating to special-status species and biological surveys.

Qualified Hydrologist. A person who has a BA/BS or advanced degree in hydrology or other degree specializing in the scientific study of the properties, distribution, and effects of water on the earth's surface, in the soil and underlying rocks, and in the atmosphere.

Registered Professional Forester (RPF). A person licensed by the State of California to perform professional services that require the application of forestry principles and techniques to the management of forested landscapes. RPFs have an understanding of forest growth, development, and regeneration; forest health;

wildfire; soils, geology, and hydrology; wildlife and fisheries biology; and other forest resources.

Radio Frequency (RF). Of, or pertaining to, any frequency within the electromagnetic spectrum normally associated with radio wave propagation. Cellular and personal communication services wireless networks operate in the 824-894 Megahertz (MHz) and the 1850-1990 MHZ ranges, respectively. (See also Section 130.40.130: Communication Facilities), in Article 4: Specific Use Regulations, of this Title.

Ranch Marketing (Use Type)**.** Commercial activities conducted on agricultural lands which are accessory, incidental to, and compatible with the bona fide agricultural operation, as determined by the Agricultural Commissioner, conducted thereon. Such activities may include processing, packaging, the sale of agricultural products, and the following types of uses:

Bake Shop. A facility for the preparation and consumption of food items in which agricultural products grown on-site are used as a main ingredient for at least one of the baked goods, such as apples used to make apple pies, apple turnovers, or other apple pastries. Baked goods made from other ingredients may be offered for sale concurrently with goods made from produce grown on-site.

Dining Facility. An establishment where food, other than that produced on the premises (such as at a Bake Shop), is prepared and served to the public in an established seating area.

Handicrafts. Products that are made domestically by hand, normally sold by the person who made them, and do not include items that are mass produced by others.

Food Stand and chuck wagon. A facility for serving prepared food for consumption on the premises where indoor seating and dining facilities do not exist.

Special Events. See "Special Events". (See also Section 130.40.260: Ranch Marketing, in Article 4: Specific Use Regulations, of this Title).

Recreation Facilities. See "Commercial Recreation"

Recreational Vehicle. A motor home, travel trailer, truck camper, or camping trailer, with or without motive power, originally designed for human habitation for recreational or emergency occupancy with a living area of 320 square feet or less and bearing the state or federal insignia of approval for recreational vehicles.

Recreational Vehicle Park (Use Type)**.** Any area or tract of land, or a separate designated section within a mobile home park where two or more lots are rented, leased, or held out for rent or lease to accommodate owners or users of recreational vehicles, camping cabins, or tents (*California Health and Safety Code Section 18862.39*).

Rendering Plant (Use Type)**.** An establishment engaged in the rendering of inedible stearin, grease, and tallow from animal fat, bones and meat scraps.

Research and Laboratories Services (Use Type)**.** Establishments engaged in the study, testing, design, analysis, and experimental development of products, processes, or services. Typical uses include soils and materials testing, electronics research, and pharmaceutical research laboratories.

Resource Extraction. See "Mining"

Resource Protection and Restoration (Use Type)**.** Lands and management activities dedicated to the protection and conservation of natural resources, such as aquatic environments, wetland and sensitive riparian habitat, water recharge areas, and rare or endangered plant or animal habitat.

Restaurant (Use Type)**.** Establishments engaged in the sale of prepared food and beverages for on-premise consumption or as "to-go", excluding those uses classified as Bars and Drinking Establishments. Typical uses include full-service restaurants, fast-food restaurants, sandwich shops, ice cream parlors, and pizza parlors. The sale of alcoholic beverages is secondary to the sale of prepared food. "To-go" or fast-food restaurant use types are divided into the following categories:

> **With Drive-through.** Restaurants which contain one or more drive-up windows, and may contain seating.
>
> **Without Drive-through.** Restaurants where food and beverages are ordered and served at a table or walk-up counter, only.

Retail Sales and Service (Use Type)**.** Establishments engaged in the sale of new or used goods and merchandise or in providing property and personal services, excluding those uses classified under Animal Sales and Service, Automotive and Equipment, Business Support Services, Food and Beverage Retail Sales, and Mobile/Manufactured Home Sales Lots. Retail Sales and Service use types are divided into the following categories:

> **<u>Sales</u>:**
>
> > **Indoor.** Those retail sales establishments where merchandise is displayed and sales are conducted entirely within a building. Typical sales uses include hardware, auto parts, drug and discount, furniture, and sporting goods stores; and bakeries.
> >
> > **Outdoor.** Those retail sales establishments where merchandise is displayed and sales are conducted entirely or partially outside of a building, such as landscape materials, lumber and construction material, mobile/manufactured home sales lots, and plant nursery sales.

Temporary Outdoor. The retail sales of merchandise displayed outside of a building or structure on a specified, temporary basis. Typical uses include sidewalk or parking lot sales, and farmers' markets. (See also "Seasonal Sales").

Services:

Property. Establishments engaged in providing services relating to maintenance and support of off-site development, including, but not limited to landscaping, pest control, professional painting, delivery, janitorial, pool, and security services.

Personal. Establishments engaged in providing services relating to personal improvement or appearance, such as barber shops, beauty salons, therapeutic massage parlors, tailors, shoe repair shops, self-service laundries, and dry cleaners.

Review Authority. The agency, Board, Commission, or other legally designated individual or authority which has been charged with review and approval of project plans and permit development applications.

Ridgeline. (1) A line connecting the highest points along a ridge and separating drainage basins or small-scale drainage systems from one another; or (2) The intersection of two roof surfaces forming the highest horizontal line of the roof.

River Put-In and Take-Out (Use Type)**.** Sites and facilities for the put-in and take-out of rafts, canoes, kayaks, and other non-motorized watercraft primarily on the South Fork of the American River, which serve commercial outfitters or are open to the general public.

Roads. As used in this Title, roads shall be categorized as follows:

Easement. A grant by the property owner of the use of his/her property to another person, the general public, or an entity such as a homeowner's association for transit, access, or egress purposes where legal title to the underlying land is retained by the property owner for all other purposes.

Right-of-Way. A strip of land acquired by fee title or easement that is occupied or intended to be occupied by certain transportation and/or public use facilities, such as roadways, walkways, trails, railroads, and/or utility lines, whether or not the entire area is actually used for such purpose(s).

Rooming House (Use Type)**.** A single-unit or multi-unit dwelling where two or more individual bedrooms are rented by the property owner or manager in residence, for a period exceeding 30 days, whether or not meals are provided, provided that no resident thereof requires any element of care.

Salvage and Wrecking Yards (Use Type)**.** Establishments engaged in the dismantling of automobiles and other vehicles, equipment, machinery, or appliances; and the storage, sale, or dumping of such material and other materials, such as tires or scrap metal.

Schools (Use Type)**.** Educational facilities and institutions including classrooms and associated administration offices, playgrounds, and assembly areas. Schools are divided into the following categories:

> **Colleges and Universities.** Institutions of higher education operated by a public or private agency granting associated arts degrees, certificates, undergraduate and graduate degrees, and requiring at least at high school diploma or equivalent general academic training for admission.
>
> **Elementary and Secondary, Private.** Schools operated by a private company, non-profit, or religious entity providing education to students from kindergarten through grade 12, excluding those categorized under Specialized Education and Training.
>
> **Elementary and Secondary, Public.** Schools operated by a public school district serving students from kindergarten through grade 12.

Seasonal Sales. The off-site, outdoor, wholesale or retail sale of seasonal, holiday-related products, such as pumpkins and Christmas trees.

Seasonal Worker Housing. See "Employee Housing: Seasonal Worker"

Secondary Dwelling (Use Type)**.** A residential unit, either attached or detached, with independent living, sleeping, dining, kitchen, and sanitation facilities that is accessory to the primary dwelling on a lot zoned for single-unit residential development. (See also Section 130.40.300: Secondary Dwellings, in Article 4: Specific Use Regulations, of this Title).

Self Storage (Mini-storage). See "Storage, Self"

Septic System. An on-site sewage disposal system, including any combination of septic tanks and leaching or evaporative systems or areas, subject to the requirements of the Environmental Management Department.

Shade Structure. Awnings, arbors, gazebos, and similar structures used to provide shade, either attached to another structure or free-standing. See also "Structure, arbor".

Sign. Any device, structure, fixture, or placard displaying graphics, symbols, and/or written copy for the primary purpose of communicating with the public as defined in Chapter 130.36 (Signs) in Article 3 (Site Planning and Project Design Standards) of this Title.

Ski Area (Use Type)**.** Land areas and facilities to accommodate downhill (alpine) skiing and snowboarding, to include ski lifts, day lodge, and restaurant facilities, but not overnight accommodations.

Slaughterhouse (Use Type)**.** An establishment primarily engaged in slaughtering cattle, hogs, sheep, lambs, calves and/or other animals for meat to be sold or to be used on the same site in canning, curing and freezing, and in the making of sausage, lard and other products.

Slope. The land gradient described as the vertical rise divided by the horizontal run and expressed in percent.

Solar Collection Systems (Use Type)**.** Any solar panel system or structural design feature whose primary purpose is to provide for the collection, storage, and distribution of solar energy for space heating or cooling; for domestic, recreational, therapeutic, or service water heating; and for the generation of electricity. Solar collection systems may include active thermal systems and/or passive thermal systems. Active thermal systems include the use of photovoltaic panels or solar thermal collectors, with electrical or mechanical equipment to convert sunlight into useful outputs. Passive solar techniques include orienting a building to the sun, selecting materials with favorable thermal mass or light dispersing properties, and designing spaces that naturally circulate air. Active thermal systems increase the supply of energy, while passive solar techniques reduce the need for alternate resources. (See also Section 130.40.310: Solar Collection Systems, in Article 4: Specific Use Regulations, of this Title).

Snow Play Area (Use Type)**.** Areas used for snow play without developed facilities such as rope tows or ski lifts.

Special Events (Use Type)**.** Temporary events that are usually held outdoors whether or not for compensation, such as auctions, carnivals, rodeos, concerts, and religious revival meetings. Special events may be further defined based on the use types below:

> **Special Events, Wineries.** Events held on-site that are not considered to be tasting or marketing activities, as described in Section 130.40.400 (Wineries) in Article 5 (Planning Permit Processing) of this Title, such as charitable, promotional, or facility rental events, including those listed under "Special events, Ranch Marketing" below.
>
> **Special Events, Ranch Marketing.** Events such as weddings, parties, company picnics, birthdays, reunions, or other social gatherings. (See also Section 130.40.260: Ranch Marketing, in Article 4: Specific Use Regulations, of this Title).

Specialized Education and Training (Use Type)**.** Private establishments providing training or education programs where all activities are carried on inside a building, such as vocational schools, drama, dance or music studios, language schools, computer training centers, and similar non-industrial type uses.

Stables (Use Type)**.** Stables are divided into the following categories:

> **Commercial.** Facility for keeping horses available to the public for hire. This may also include larger equestrian facilities that specialize in breeding and raising of

horses, and equestrian training, exhibitions, and boarding; and their accessory structures, such as arenas, spectator stands, and training facilities. Commercial stables do not include the keeping or breeding of horses for personal use, training, or horse boarding consistent with a home occupation. (See also Section 130.40.210: Outdoor Recreation Facilities, in Article 4: Specific Use Regulations, of this Title).

Private. An equestrian facility that is used for the shelter, breeding and raising of horses and other domestic farm animals for the exclusive use of the property owner or occupant, or for training, horse boarding and student instruction consistent with a home occupation. (See also Section 130.40.160: Home Occupations, in Article 4: Specific Use Regulations, of this Title).

Start of Construction. The date the building permit was issued, provided the actual construction, repair, reconstruction, placement, or other improvement was within 180 days of the permit date. The actual start means either the first placement of permanent construction of a structure on a site, such as the pouring of slab or footings, the installation of piles, the construction of columns, or any work beyond the stage of excavation; or the placement of a manufactured home on a foundation. For the purposes of floodplain management, permanent construction does not include land preparation, such as clearing, grading and filling; nor does it include the installation of street or walkways; nor does it include excavation for a basement, footing, piers, or foundations or the erection of temporary forms; nor does it include the installation on the property of accessory buildings, such as garages or sheds not occupied as dwelling units or not part of the main structure. For other purposes, permanent construction shall include all of the above activities.

Storage, Self (Use Type)**.** A building or group of buildings in a controlled access and fenced compound that contains varying sizes of individual, compartmentalized, and controlled access units, stalls, or lockers for the storage of lessees' goods or wares. (See also Section 130.40.320: Storage Facilities, in Article 4: Specific Use Regulations, of this Title).

Storage Yards: Equipment and Material (Use Type)**.** All uses related to outdoor storage of large construction equipment or machinery, company vehicles, and materials produced or constructed on-site for off-site sales and/or delivery. Parking lots accommodating the personal vehicles of employees or visitors to the site are not included in this definition. Equipment and Materials Storage Yards are divided into the following categories:

Permanent. Those storage yards that are intended to be used on a permanent or long-term basis including, but not limited to, contractor's storage yard(s), corporation yards, and incidental outside storage associated with transportation corridor, manufacturing, farming, ranching and resource extraction operations such as mining or logging.

Temporary. Those storage yards that serve a single construction project and which shall be removed after a specified period of time. (See also Section 130.40.320: Storage Facilities, in Article 4: Specific Use Regulations, of this Title).

Stream. A natural or man-made channel through which water flows. It does not include channels and ditches lined with concrete or similar impervious material that are devoid of sensitive riparian vegetation, nor does it include underground drainage and sewer systems. The term can be interchangeable with "watercourse" or "river". Types of streams are as follows:

Intermittent. Defined and normally flowing for at least 30 days after the last major rain of the season and dry the remainder of the year.

Perennial. Either shown on the United States Geological Survey (USGS) 7.5 minute map series as a solid blue line or normally flowing year round.

Structure. Something built or erected from multiple parts, such as a building, bridge, framework, or other object, and is 30 inches or greater in height at its tallest point, as measured from the finished grade directly below said point. Specific types of structures are further defined as follows:

Accessory. A building detached from and customarily associated with the primary building on the same lot. In this instance, "detached" shall mean not sharing a common wall with any portion of the primary building. For example, a breezeway connecting two buildings does not create a shared common wall between them; therefore the buildings are considered detached from each other. (See also Section 130.40.030: Accessory Structures and Uses, in Article 4: Specific Use Regulations, of this Title).

Agriculture. (Development Standards) Any structure associated with agricultural activities on a lot including, but not limited to barns, stables, and animal shelters; and storage facilities for animal feed, farm machinery, and chemicals, and not intended for human habitation, a place of employment or public assembly.

Arbor. A framework structure used to support vegetation that forms a covered area overhead from interwoven leaves and branches in order to provide shade. Also known as a "pergola".

Building. A structure having a roof supported by columns or by walls, and designed for the shelter or housing of any person, animal, use, or personal property.

Historic. Any structure that is:

1. Listed individually in the National Register of Historic Places (a listing maintained by the Department of Interior) or preliminarily determined by the Secretary of the Interior as meeting the requirements for individual listing on the National Register;

2. Certified or preliminarily determined by the Secretary of the Interior as contributing to the historical significance of a registered historic district or a

district preliminarily determined by the Secretary to qualify as a registered historic district;

3. Individually listed on a state inventory of historic places in states with historic preservation programs which have been approved by the Secretary of Interior; or

4. Individually listed on the county inventory of historic places, if and when a historic preservation program has been certified either by an approved state program as determined by the Secretary of the Interior or directly by the Secretary of the Interior in states without approved programs.

Trellis. A vertical framework for the support of climbing vegetation that differs from an arbor in that it does not provide a covered area.

Studio. See "Workshop"

Swimming Pool, Public (Use Type)**.** Publicly owned swimming pools and pools that are part of a private recreation facility operated by a membership club or a homeowners' association, as part of a subdivision.

Tandem Parking. Two or more parking spaces aligned end to end so that a vehicle occupying one space must move to access the second space.

Technical Advisory Committee. A committee consisting of the Department staff assigned to a project and representatives of other county, local, and state agencies having jurisdiction or interest in the project.

Temporary Mobile Home (Use Type)**.** A mobile or manufactured home placed on a single-unit residential lot, as a temporary dwelling unit subject to Sections 130.40.190: Mobile/Manufactured Homes, in Article 4 (Specific Use Regulations), and 130.52.050: Temporary Mobile Home Permit, in Article 5 (Planning Permit Processing), of this Title.

Temporary Use. A short-term activity lasting more than one hour within any 24-hour period, not usually requiring permanent structures, and not exceeding the frequency of use allowed in Section 130.52.060 (Temporary Use Permit), in Article 5 (Planning Permit Processing), of this Title.

Tennis Courts, Public (Use Type)**.** Publicly owned tennis courts and tennis courts that are part of a private recreation facility operated by a membership club or a homeowners' association, as a part of a subdivision.

Timber (Use Type)**.** The operation and harvesting of timber tracts, tree farms, forest nurseries, whether planted or of natural growth, standing or down, including Christmas trees and nursery stock for restocking commercial forest land .and related activities such as reforestation services; also the gathering of gums, barks, sap, moss and other forest products;

may include logging camps and sawmills (except for mills producing finished lumber, which are allowed under industrial uses).

Tower, Communications. A free-standing lattice work structure, pole, monopole, or guyed tower used to support antennae. (See also Section 130.40.130: Communication Facilities, in Article 4: Specific Use Regulations, of this Title).

Trade Schools (Use Type)**.** Private establishments providing vocational training or education programs of an industrial nature where activities can be carried on inside or outside of a building. Typical uses include, but are not limited to training in auto repair, welding, or truck driving.

Trail Head Parking or Staging Area (Use Type)**.** Parking lots, restrooms, and similar non-commercial facilities for the convenience of hikers, equestrians, cyclists, and skiers at a trail head or intersection of a trail and road easement or right-of-way.

Trails, Non-motorized (Use Type)**.** A path or track linking other paths and points of interest for the use of non-motorized vehicle traffic, such as hiking or horseback riding.

Traditional Neighborhood Design. A compact development pattern that promotes an efficient use of land, including residential and non-residential uses. The design addresses walking distances, heights of buildings, design of street lights and signs, landscaping, sidewalks and other features. Design may include a mix of uses including commercial, civic buildings, open space and residential uses within close proximity to one another. The mix of uses may be vertical or horizontal and may include small lot detached single family, attached single family, multi-family and specialty housing for seniors.

Transitional Housing (Use Type)**.** Housing with supportive services for up to 24 months that is exclusively designated and targeted for recently homeless persons. Transitional housing includes self-sufficiency development services, with the ultimate goal of moving recently homeless persons to permanent housing as quickly as possible, and limits rents and service fees to an ability-to-pay formula reasonably consistent with the United States Department of Housing and Urban Development's requirements for subsidized housing for low-income persons. Rents and service fees paid for transitional housing may be reserved, in whole or in part, to assist residents in moving to permanent housing. (U.S. Department of Housing and Urban Development, *Health and Safety Code Section 50801).*

Trellis. See "Structure"

Use, Accessory. See "Accessory Structures and Uses"

Vacation Home Rental (Use Type)**.** See "Lodging Facilities"

Value-Added. See "Agriculture, Value-Added Product"

Vehicle, Heavy Commercial. Vehicles used for commercial purposes that require a Commercial Driver's License in compliance with state Department of Motor Vehicle regulations. These vehicles include, but are not limited to buses or cars that seat ten or more passengers, tow trucks, dump trucks, truck tractors with or without semi-trailers, flat bed trucks, fork lifts, front end loaders, backhoes, logging vehicles, graders, bulldozers, and other similar construction equipment.

Warehouse. See "Wholesale Storage and Distribution"

Water Feature. A design element where open water performs an aesthetic or recreational function. Water features, including natural and man-made ponds, lakes, waterfalls, fountains, artificial streams, spas, and swimming pools. Constructed wetlands used for on-site wastewater treatment or stormwater best management practices that are not irrigated and used solely for water treatment or stormwater retention are not water features.

Wet Bar. A single, bar-sized sink with minimal cabinets and counters. A wet bar shall not include a gas or electric range, stove top, or oven (not including a microwave oven); a refrigerator in excess of 5 cubic feet in size; or a standard-sized kitchen sink.

Wetland. Land that qualifies as a jurisdictional wetland by displaying hydric soils, hydrophilic plants, and wetlands hydrology, as defined by the U.S Army Corps of Engineers. Wetlands include those areas that are inundated or saturated by surface water or groundwater at a frequency and duration sufficient to support, and that under normal circumstances do support, a prevalence of vegetation typically adapted for life in saturated soil conditions. Wetlands generally include swamps, marshes, bogs, and similar areas.

Wholesale Storage and Distribution (Use Type)**.** Establishments engaged in wholesaling, storage, warehousing, and bulk sale distribution. It does not include uses classified under "Equipment and Materials Storage Yard".

Wineries (Use Type)**.** Facilities producing and bottling wine for sale. Wineries are divided into the following categories:

> **Production Facilities.** Those facilities used for production and bottling without tasting room and accessory retail sales facilities.
>
> **Full-service Facilities.** Those facilities used for production, bottling, wine tasting, and retail sales of wine and other incidental goods. (See also Section 130.40.400: Wineries, in Article 4: Specific Use Regulations, of this Title).

Workshop. A residential accessory structure typically associated with craftwork, hobbies, woodwork, artwork, and similar activities by the property owner or lessor, which does not contain sleeping quarters or kitchen facilities, and is not intended for permanent occupancy.

Yards. The area of a lot extending between the property line and its setback line as follows:

Front Yard. An area extending across the full width of a lot between the edge of any road easement or right-of-way and the front setback line for the zone. Where a lot adjoins more than one road, the front yard is the street frontage designated on the building permit application. (See also Subsection 130.30.030.A.4: Setback Requirements and Exceptions, in Article 3: Site Planning and Project Design Standards, of this Title).

Rear Yard. An area extending across the full width of a lot between the rear lot line or point, if a triangular lot, and the rear setback line for the zone.

Side Yard. Area(s) across the full length of a lot between the front and rear property lines that extends between the side property line(s) and the side setback line(s) for the zone.