TABLE OF CONTENTS

PLAN NO.	DESCRIPTION
	GENERAL LEGEND AND NOTES
101A	COMMERCIAL AND INDUSTRIAL ROADWAYS
101B	CLASS I SUBDIVISIONS and PARCEL MAP (LESS THAN 2 ACRES IN URBAN AREA) ROADWAY
101C	RURAL SUBDIVISION AND PARCEL MAP ROADWAYS
103A–1	DRIVEWAY CONNECTION– SINGLE UNIT, CLASS I SUBDIVISION WITH ROLLED CURB & GUTTER
103A–2	DRIVEWAY CONNECTION– SINGLE UNIT RESIDENCE, CLASS I SUBDIVISION WITHOUT CURB & GUTTER
103B–1	DRIVEWAY CONNECTION– SINGLE UNIT TO LOCAL ROAD OR MINOR COLLECTOR
103B–2	DRIVEWAY CONNECTION– SINGLE UNIT, CLASS I SUBDIVISION ONLY WHERE A.C. DIKE EXISTS
103C	DRIVEWAY CONNECTION– MINOR COMMERCIAL/INDUSTRIAL, ETC.
103D	LOCAL ACCESS ROAD TO COLLECTOR & MAJOR COMMERCIAL CONNECTION
103E	MINOR COLLECTOR TO COLLECTOR/ARTERIAL
103F	MAJOR COLLECTOR TO COLLECTOR/ARTERIAL
103G	COMMERCIAL DRIVEWAY FOR VERTICAL CURB LOCATIONS
104	CONCRETE CURB AND GUTTERS, A.C. DIKE
105A	STOP SIGN
105B	STREET SIGN
105C	BARRICADES/ROAD ENDS SIGN DETAIL
106	FIRE HYDRANT LOCATION DETAIL
109	COMMERCIAL DRIVEWAY REGULATIONS
110	SPECIAL COMMERCIAL FRONTAGE ENTRANCE
114	CUL–DE–SAC
115A	GRATED INLET TYPE B
115B	DROP INLET/CALTRANS TYPE B
115C	PELICAN GALLERY SANTA ROSA MODEL 6Y/MODEL 4AC CURB INLET
118	ROCK LINED DITCH
119	UNDERGROUND TRENCH DETAIL
120	UTILITY POLE LOCATIONS
T–501	ROCK LINED CHANNELS
T–502	GATE DETAIL
T–503	VEHICLE BARRIER
T–504	ROCK INLET/OUTLET PROTECTION
T–505	PAVED SWALE
T–506	ROCK BREAST WALL
T–507	ROCK SLOPE PROTECTION
T–508	3' AND 4' TIMBER RETAINING WALL

STATEMENT OF DISCLOSURE

THESE STANDARDS ARE IN CONFORMANCE WITH GENERALLY ACCEPTED ENGINEERING PRACTICES. THE INTENT OF THESE STANDARDS IS TO ESTABLISH GUIDELINES FOR PUBLIC WORKS APPLICATIONS. IT IS UNDERSTOOD THAT THESE STANDARDS WILL NOT BE APPLICABLE TO EVERY SITUATION. THE COUNTY ENGINEER HAS THE AUTHORITY TO MAKE EXCEPTIONS TO THESE STANDARDS.

EL DORADO COUNTY
DEPARTMENT OF TRANSPORTATION
DESIGN STANDARDS

TABLE OF CONTENTS

SYMBOLS

- CENTERLINE
- PROPERTY LINE
- FENCE LINE
- RIGHT OF WAY
- OVERHEAD ELECTRICAL
- UNDERGROUND ELECTRICAL
- SEWER LINE
- WATER LINE
- GAS LINE
- FLOWLINE
- GUARDRAIL
- AC DIKE
- EXISTING EMBANKMENT SLOPE
- NEW EMBANKMENT SLOPE
- EXISTING PIPE IN SECTION
- NEW PIPE IN SECTION

DEFINITIONS

AB	– AGGREGATE BASE
A.C.	– ASPHALT CONCRETE
ADT	– AVERAGE DAILY TRAFFIC COUNT
ASTM	– AMERICAN SOCIETY FOR TESTING AND MATERIALS
BC	– BEGIN CURVE
C & G	– CURB AND GUTTER
CIP	– CAPPED IRON PIPE
℄	– CENTERLINE
CMP	– CORRUGATED METAL PIPE
C.O.S.	– CLEANOUT STRUCTURE
CSP	– CORRUGATED STEEL PIPE
EC	– END CURVE
EP	– EDGE OF PAVEMENT
FL	– FLOWLINE
FC	– FACE OF CURB
F.E.S.	– FLARED END SECTION
I.F.	– INSIDE DIAMETER
O.C.	– ON CENTER
O.D.	– OUTSIDE DIAMETER
P.C.C.	– PORTLAND CEMENT CONCRETE
PL	– PROPERTY LINE
PVC	– POLY–VINYL–CHLORIDE
RCP	– REINFORCED CONCRETE PIPE
R/W	– RIGHT OF WAY
SB	– SUBBASE
SG	– SUBGRADE
TBC	– TOP BACK OF CURB
TW	– TOP OF WALL

GENERAL NOTES

1. ALL A.C. TO BE 1/2" MAXIMUM, MEDIUM TYPE B WITH AR 4000 FOR A.C. SECTIONS OF 2 1/2". FOR GRADES EXCEEDING 7% OR ELEVATIONS OVER 3000', 3/4" MIX REQUIRED. FOR A.C. SECTIONS OF 3", 2" WILL BE 3/4" MAXIMUM, MEDIUM TYPE B (LOWER LIFT) AND 1" OF 1/2" ON TOP.
2. INTERSECTION SIGHT DISTANCE WILL BE MEASURED FROM A HEIGHT OF 3'–6" TO A HEIGHT OF 3'–6" (AASHTO).
3. FIVE SACK CEMENT CONCRETE FOR DRIVEWAYS, SIDEWALKS, AND SIX FOR DRAINAGE STRUCTURES.
4. CUT AND FILL SLOPES SHALL BE NO STEEPER THAN TWO HORIZONTAL TO ONE VERTICAL, UNLESS A CIVIL ENGINEER DETERMINES THAT A STEEPER SLOPE WILL BE SAFE FOR THE INTENDED USE, WILL NOT BE SUSCEPTABLE TO EROSION, AND WILL NOT CAUSE ADDITIONAL MAINTENANCE.
5. TWENTY FEET MINIMUM ROADWAY WIDTH REQUIRED FOR CDF AND FIRE PROTECTION VEHICLE ACCESS. (STANDARD RIG SIZE = 96" WIDE, PLUS 10" FOR EACH SIDE MIRROR AND 13'–6" HIGH CLEARANCE.)
6. A STORM DRAIN MANHOLE OR CLEANOUT WILL BE PLACED EVERY 300' OR AT ANY JUNCTION. THESE STORM DRAIN MANHOLES/C.O.S. WILL BE INSTALLED WITH 24" OPENINGS FOR 3' DEEP, 36" FOR UP TO 5', AND 48" OVER 5' DEEP. NUMBER 4 REBAR REQUIRED 12" O.C. ON ALL D.I.'s OVER 5' IN DEPTH, AND ON STORM DRAIN MANHOLES OVER 8' IN DEPTH.
7. GRADES MAY REACH 15% FOR NO MORE THAN 600'. IN ELEVATIONS ABOVE 3000'. GRADES SHALL NOT EXCEED 10% (15% IF SURFACED)

EL DORADO COUNTY
DEPARTMENT OF TRANSPORTATION
DESIGN STANDARDS

EL DORADO COUNTY DOT DEPT. OF TRANSPORTATION

GENERAL LEGEND & NOTES

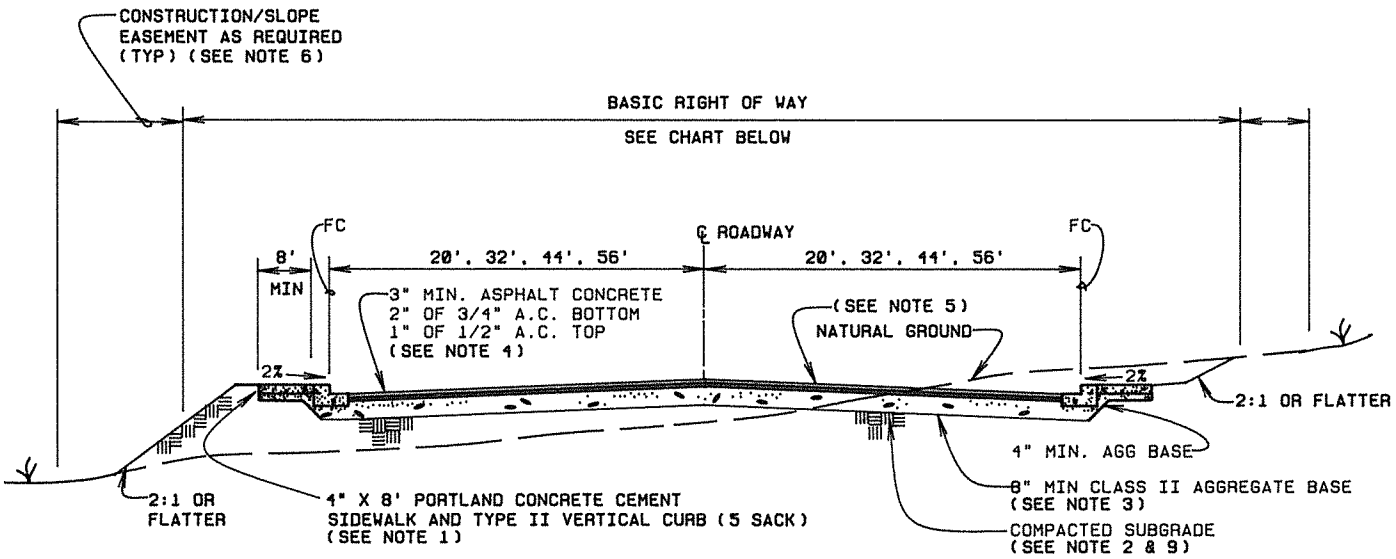

R/W	ROADWAY WIDTH	ADT	DESIGN SPEED	MAX. GRADE
60'	40'	LESS THAN 5000	40	12% *
80'	64'	5001 TO 36,000	40	10%
110'	88'	36,001 TO 60,900	40	10%
130'	112'	60,901 TO 85,500	40	10%

* WITH COUNTY ENGINEER'S APPROVAL

NOTES:

1. TYPE 2 CURB AND GUTTER AS SHOWN ON STANDARD PLAN 104, 8' MINIMUM SIDEWALKS ARE REQUIRED ON INDUSTRIAL AND COMMERCIAL STREETS.
2. TOP 6" OF SOIL BELOW SUBGRADE SHALL BE COMPACTED TO 95% RELATIVE COMPACTION (C.T.M. 231F OR ASTM 1557).
3. CLASS 2 AGGREGATE BASE, COMPACTED TO 95% RELATIVE COMPACTION (C.T.M. 231F OR ASTM 1557) INCLUDING SIDEWALKS AND CURB & GUTTERS. ALL AGGREGATE BASE WILL MEET CALTRANS REQUIREMENTS FOR GRADATIONS AND S.E.
4. OVER ALL AGGREGATE BASE, ASPHALT CONCRETE SHALL BE TYPE B PER CALTRANS STANDARD SPECIFICATION 39, 1" OF 1/2" MAX. MED. OVER 2" OF 3/4" A.C. ASPHALT GRADE AR-4000. FOR GRADES EXCEEDING 7%, OR ELEVATIONS OVER 3000 FT., A.C. SECTION WILL BE ONLY 3/4" MAX. MED. TYPE B. TACK COAT TO BE USED BETWEEN A.C. LIFTS.
5. FOG SEAL SS-1 OVER ALL A.C., PRIME COAT WILL BE SC70.
6. WHEN THE GRADING FOR CUT AND FILL SLOPES EXTENDS OUTSIDE OF THE BASIC RIGHT OF WAY WIDTH, A SLOPE EASEMENT WILL BE PROVIDED 2' BEYOND ALL TOE OF FILLS, HINGE OF CUTS, OR DRAINAGE STRUCTURES.
7. ADT'S SHALL BE THOSE SHOWN IN THE THE LAND CAPABILITY REPORT UNLESS DETERMINED OTHERWISE BY THE COUNTY ENGINEER.
8. BELOW THE 3000 FT. ELEVATION, ROLLED CURB TYPE 1 ONLY REQUIRED FOR SNOW REMOVAL.
9. IN EXISTING CUT SECTIONS, THE TOP 6" OF SUBGRADE WILL BE SCARIFIED AND RECOMPACTED TO 95% RELATIVE COMPACTION.

NOT TO SCALE

GENERATED	REVISIONS
NO.	
DATE: 04/03/90	
DESIGNED:	
DRAWN: JM/SR/BS	
CHECKED: SKP	
APPROVED:	

APPROVED:

DIRECTOR OF TRANSPORTATION

SENIOR CIVIL ENGINEER — P.E. NO. C33427

EL DORADO COUNTY
DEPARTMENT OF TRANSPORTATION

DESIGN STANDARDS

COMMERCIAL AND INDUSTRIAL ROADWAYS

STD. PLAN 101A

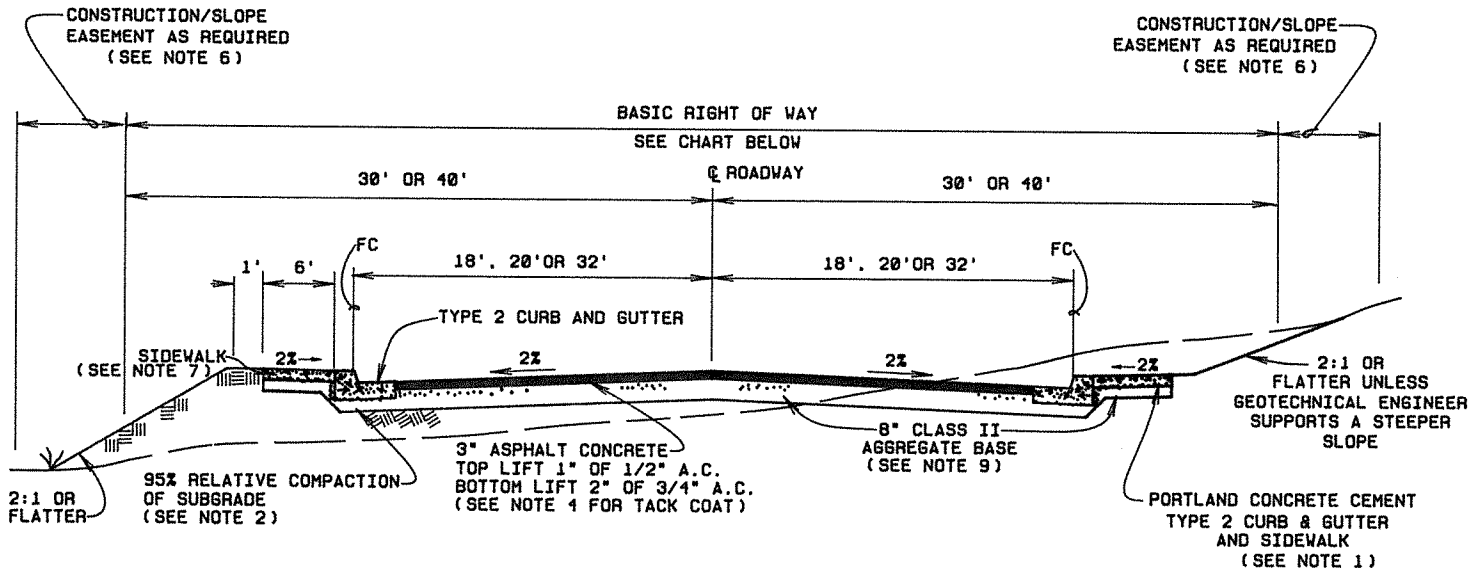

NOT TO SCALE

R/W	ROADWAY WIDTH (CURB FACE TO CURB FACE)	ADT	DESIGN SPEED	MAX. GRADE
50'	28' **	0-350 *	25 *	15% *
50'	36' **	351-2000	25	15% *
60'	40'	2001-5000	35	12%
80'	64'	5001-18000	40	10%

* WITH COUNTY ENGINEER'S APPROVAL

** TYPE I ROLLED CURB AND GUTTER

NOTES:

1. IN EXISTING CUT SECTIONS, SCARIFY AND RECOMPACT SUBGRADE TO 95% REL. COMPACTION. KEY IN SLOPES OVER 10:1.
2. TOP 6" OF NATIVE SUBGRADE SHALL BE COMPACTED TO 95% (C.T.M. 231F OR A.S.T.M. 1557)
3. CLASS 2 AGGREGATE BASE COMPACTED TO 95%, PER CALTRANS STANDARD SPECIFICATIONS SECTION 26. (C.T.M. 231F OR A.S.T.M. 1557) INCLUDING THE 4" UNDER CURB & GUTTER, AND SIDEWALKS.
4. OVER ALL AGGREGATE BASE, ASPHALT CONCRETE SHALL BE TYPE B PER CALTRANS STANDARD SPECIFICATION 39, AGGREGATE 1/2" MAX. MEDIUM TYPE B, ASPHALT GRADE AR-4000. FOR GRADES EXCEEDING 7%, AND ELEVATIONS OVER 3000 FT., A.C. TO BE ONLY 3/4" MAX. MEDIUM. TACK COAT TO BE USED BETWEEN A.C. LIFTS.
5. FOG SEAL SS-1 OVERALL A.C. PRIME COAT TO BE SC70.
6. WHEN THE GRADING FOR CUT AND FILL SLOPES EXTENDS OUTSIDE OF THE BASIC RIGHT OF WAY WIDTH, SLOPE EASEMENT WILL EXTEND 2' BEYOND HINGES, TOES AND DRAINAGE STRUCTURES.
7. ADJACENT TO SCHOOLS, SIDEWALKS SHALL BE 8 FEET WIDE, AND EXTEND BETWEEN SCHOOL PROPERTY LINES.
8. ADT's SHALL BE THOSE SHOWN IN THE LAND CAPABILITY REPORT UNLESS DETERMINED TO BE OTHERWISE BY THE COUNTY ENGINEER.
9. PAVEMENT, BASE, AND SUBGRADE COMPACTION THICKNESS MAY BE CHANGED IF DESIGNED BY A REGISTERED CIVIL OR GEOTECHNICAL ENGINEER. R-VALUE TEST RESULTS MUST BE SUBMITTED. *
10. UPON SPECIAL APPROVAL CURB, GUTTER AND SIDEWALK MAY BE CHANGED TO A.C. DIKE AND OVERSIDE DRAINS WHEN CONNECTING ONTO EXISTING A.C. FACILITIES.

GENERATED	REVISIONS
NO.	
DATE: 04/05/90	
DESIGNED:	
DRAWN: JM/SR/BS	
CHECKED: SKP	
APPROVED:	

APPROVED:

DIRECTOR OF TRANSPORTATION

SENIOR CIVIL ENGINEER — P.E. NO. C33427

EL DORADO COUNTY
DEPARTMENT OF TRANSPORTATION
DESIGN STANDARDS

CLASS I SUBDIVISION and PARCEL MAP
(LESS THAN 2 ACRES IN URBAN AREA)
ROADWAYS

STD. PLAN 101B

GREATER THAN 2,000 ADT USE STANDARD PLAN 101A OR 101B

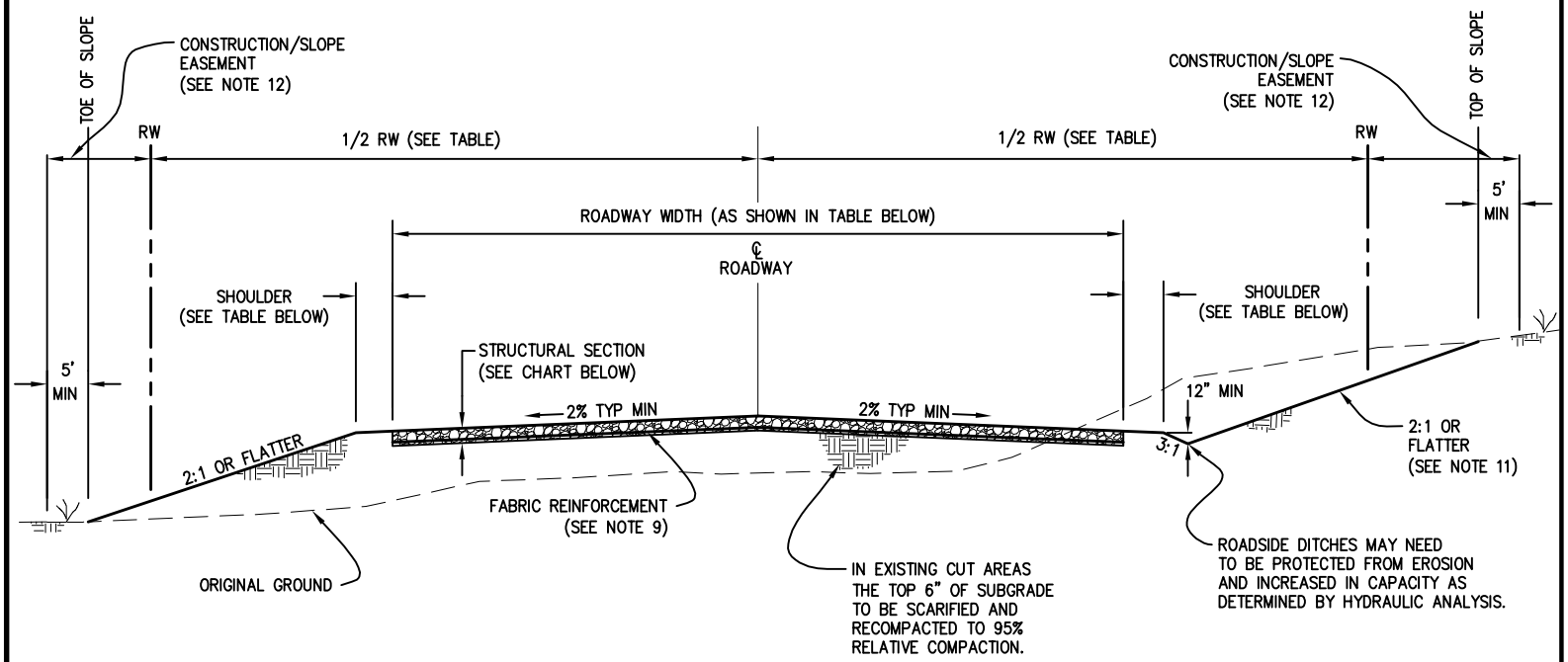

NOT TO SCALE

ADT	RW	ROADWAY WIDTH	SHOULDER WIDTH	DESIGN SPEED	MAX GRADE	STRUCTURAL SECTION
1–150	50'	18'	1' (EACH SIDE)	20 MPH	15% PAVED 12% UNPAVED ✳ (SEE NOTE 4)	6" CLASS 2 AB (SEE NOTE 10)
151–600	50'	18'	2' (EACH SIDE)	25 MPH		
601–1500	60'	20'	5' (EACH SIDE)	40 MPH	13% ✳	4" AC ON 7" AB
1501–2000	60'	22'	6' (EACH SIDE)	40 MPH		4" AC ON 8" AB
✳ 15% WITH COUNTY ENGINEER'S APPROVAL (NOT TO EXCEED 600 L.F.)						

REGISTERED PROFESSIONAL ENGINEER
RICHARD W. SHEPARD
No. C35439
License Expires 05-24-08
CIVIL
STATE OF CALIFORNIA

NOTES:

1. STANDARD PLAN 101A OR 101B SHALL BE USED FOR ALL COUNTY MAINTAINED ROADS AND ALL NON–COUNTY MAINTAINED ROADS WITHIN COMMUNITY REGIONS.
2. ADT DATA SHOWN IN THE TABLE ARE THE FORECASTED FOR 20–YEAR OUT DAILY VOLUMES.
3. ROADS ABOVE 3,000 FT ELEVATION SHALL BE AC PAVED. THE MINIMUM STRUCTURAL SECTION SHALL BE 2.5" AC ON 6" AB FOR ROADS WITH ADTS LESS THAN 601.
4. ROADS WITH ADT LESS THAN 601 MAY EXCEED THE 12% MAXIMUM GRADE, UP TO A MAXIMUM OF 15%, FOR MORE THAN 600 L.F. IF THEY ARE PAVED WITH A MINIMUM OF 2.5" AC ON 6" AB.
5. WIDENING OF EXISTING ON–SITE ROADS SHALL COMPLY WITH MINIMUM STRUCTURAL SECTION REQUIRED AND HAVE AS GOOD OR BETTER SURFACING THAN EXISTING ROAD.
6. ANY MODIFICATION TO STRUCTURAL SECTION SHOWN SHALL BE BASED ON "R" VALUE AND "T.I". DESIGN TO BE SUBMITTED TO DOT FOR REVIEW AND APPROVAL.
7. AC SHALL BE TYPE B.
8. THE TOP 6" OF SUBGRADE AND ALL CLASS 2 AB SHALL BE COMPACTED TO 95% RELATIVE COMPACTION.
9. FABRIC REINFORCEMENT IS REQUIRED ON ALL YIELDING SUBGRADES UNLESS AN ALTERNATIVE DESIGN IS PREPARED BY THE ENGINEER AND APPROVED BY THE COUNTY.
10. DOUBLE–CHIP SEAL MAY BE SUBSTITUTED FOR 2" OF AB FOR ROADS WITH ADT BELOW 601.
11. CUT AND FILL SLOPES SHALL BE NO STEEPER THAN TWO HORIZONTAL TO ONE VERTICAL, UNLESS A CIVIL ENGINEER DETERMINES THAT A STEEPER SLOPE WILL BE SAFE FOR THE INTENDED USE AND WILL NOT BE SUSCEPTIBLE TO EROSION. SLOPES OVER 10 (TEN) HORIZONTAL TO 1 (ONE) VERTICAL ARE TO BE KEYED WHEN PLACING EMBANKMENT FILL.
12. CONSTRUCTION/SLOPE EASEMENTS SHALL EXTEND 5' BEYOND HINGE POINTS, SLOPE TOES, AND DRAINAGE STRUCTURES.

APPROVED BY:

RICHARD W. SHEPARD, P.E. NO. 35439
DIRECTOR, EL DORADO COUNTY DEPARTMENT OF TRANSPORTATION

DATE: 8-17-07

BOARD OF SUPERVISOR'S RESOLUTION NO. 31–2008

EL DORADO COUNTY
DEPARTMENT OF TRANSPORTATION
DESIGN STANDARDS

EL DORADO COUNTY DOT DEPT. OF TRANSPORTATION

LOCAL ROADWAYS: RURAL REGIONS & RURAL CENTERS

STD. PLAN
101C

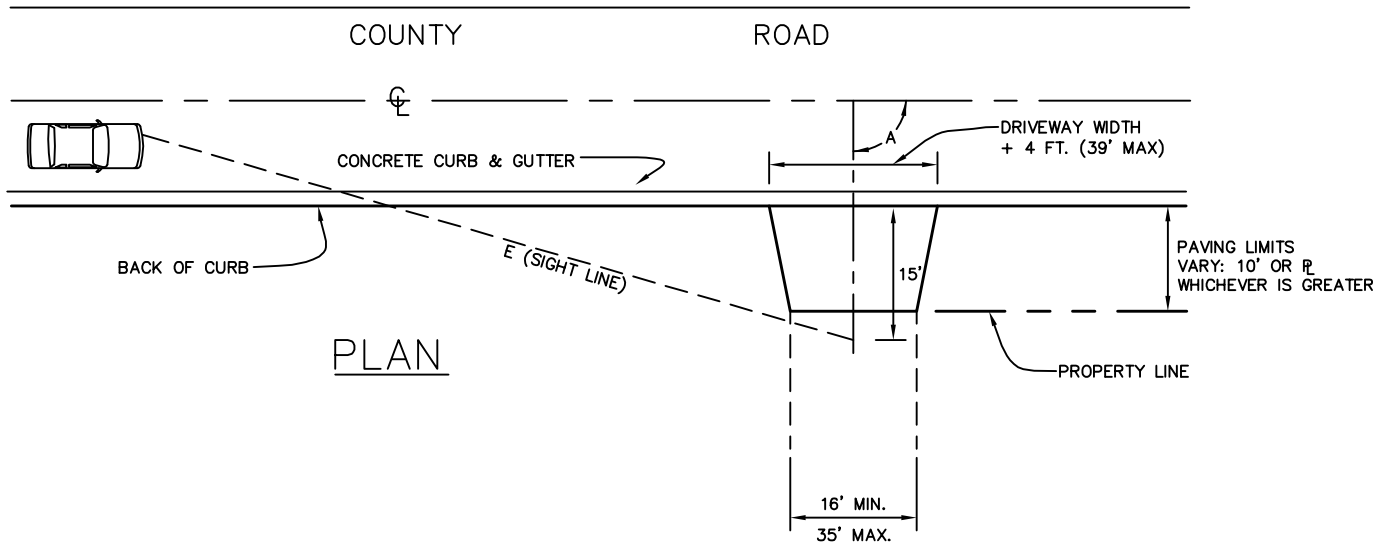

PLAN

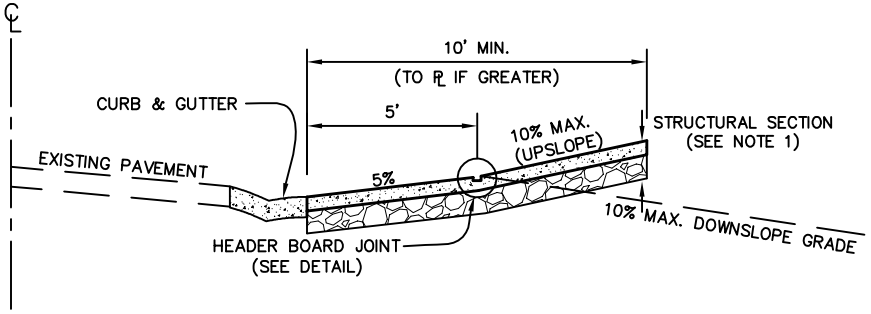

PROFILE

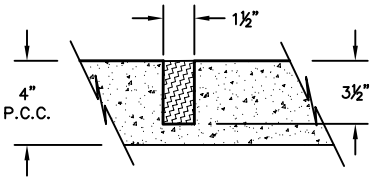

HEADER BOARD JOINT DETAIL

NOTES:

E = 200' MINIMUM SIGHT DISTANCE FOR LOCAL ST., 100' FOR A CUL-DE-SAC.

A = ANGLE OF DRIVEWAY CENTERLINE IN RELATION TO ROAD CENTERLINE, THE ANGLE WILL BE BETWEEN 70°-90°

1. THE DRIVEWAY STRUCTURAL SECTION IS 4" OF PORTLAND CEMENT CONCRETE OR 2 1/2" ASPHALT CONCRETE OVER 4" OF AGGREGATE BASE.
2. THOSE DRIVEWAYS EXCEEDING 20%, EITHER UP OR DOWN IN GRADE, WILL REQUIRE A GRADING PERMIT.
3. NO PORTION OF A DRIVEWAY WILL BE WITHIN 25' FROM A RADIUS RETURN, NOR 10' FROM A FIRE HYDRANT.

NOT TO SCALE

GENERATED	REVISIONS			APPROVED:	EL DORADO COUNTY	DRIVEWAY CONNECTION	STD. PLAN
NO.				Scott Clardel	DEPARTMENT OF TRANSPORTATION	SINGLE UNIT RESIDENCE	
DATE: 03/16/90				DIRECTOR OF TRANSPORTATION	DESIGN STANDARDS	CLASS I SUBDIVISION WITH ROLLED CONCRETE CURB AND GUTTER	103A-1
DESIGNED:				Steven K. Payne C33427			
DRAWN: JM/SR/BS				SENIOR CIVIL ENGINEER P.E. NO.			
CHECKED: SKP							
APPROVED:							

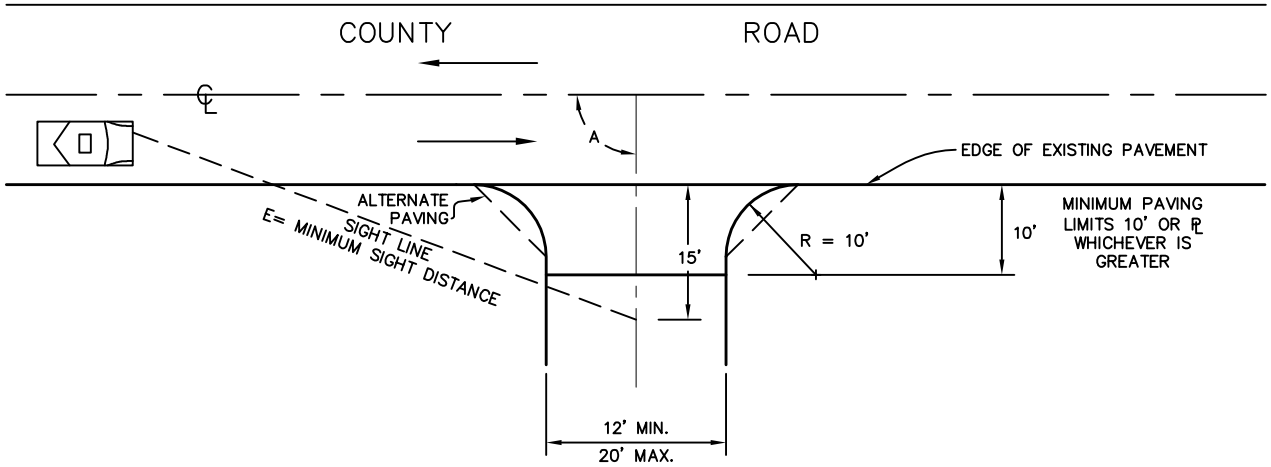

PLAN

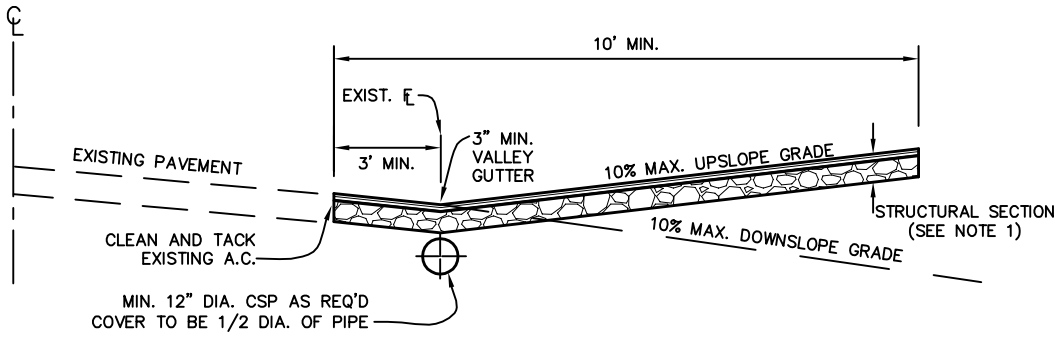

PROFILE

NOTES:

E = 200' MINIMUM SIGHT DISTANCE FOR LOCAL ST., 100' FOR A CUL-DE-SAC.

A = ANGLE OF DRIVEWAY CENTERLINE IN RELATION TO ROAD CENTERLINE, THE ANGLE WILL BE BETWEEN 70°-90°

1. THE DRIVEWAY STRUCTURAL SECTION IS 2 1/2" ASPHALT CONCRETE OVER 4" OF AGGREGATE BASE.
2. THOSE DRIVEWAYS EXCEEDING 20%, EITHER UP OR DOWN IN GRADE, WILL REQUIRE A GRADING PERMIT.
3. NO PORTION OF A DRIVEWAY WILL BE WITHIN 25' FROM A RADIUS RETURN, NOR 10' FROM A FIRE HYDRANT.

NOT TO SCALE

GENERATED	REVISIONS			APPROVED:	EL DORADO COUNTY	DRIVEWAY CONNECTION	STD. PLAN
NO.				Scott Clardel	DEPARTMENT OF TRANSPORTATION	SINGLE UNIT RESIDENCE	
DATE: 03/16/90				DIRECTOR OF TRANSPORTATION	DESIGN STANDARDS	CLASS I SUBDIVISION WITHOUT CURB & GUTTER OR A.C. DIKE	103A-2
DESIGNED:				Steven K. Pope C33427			
DRAWN: JM/SR/BS				SENIOR CIVIL ENGINEER P.E. NO.			
CHECKED: SKP							
APPROVED:							

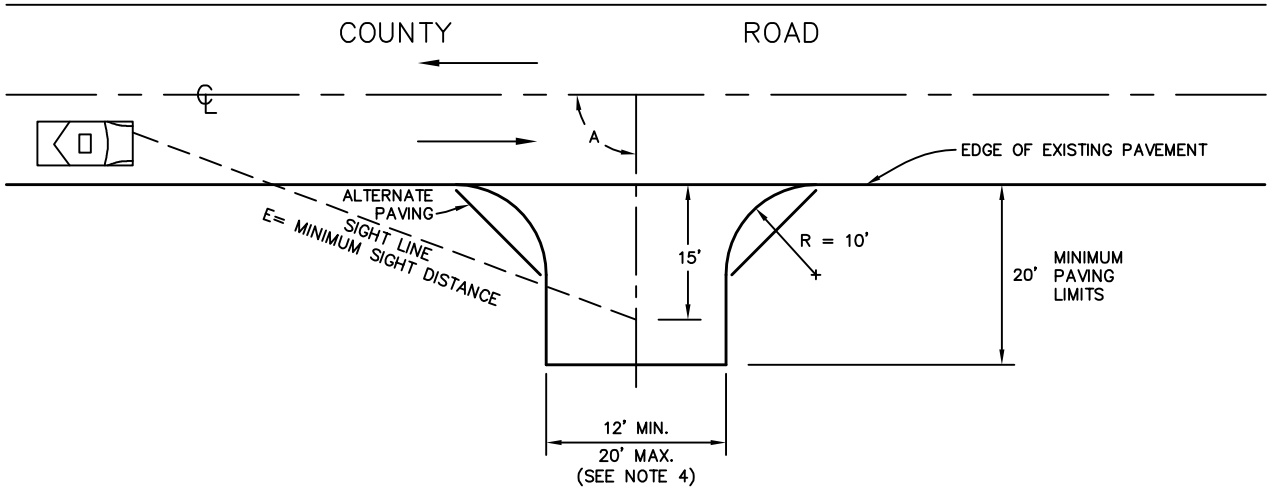

PLAN

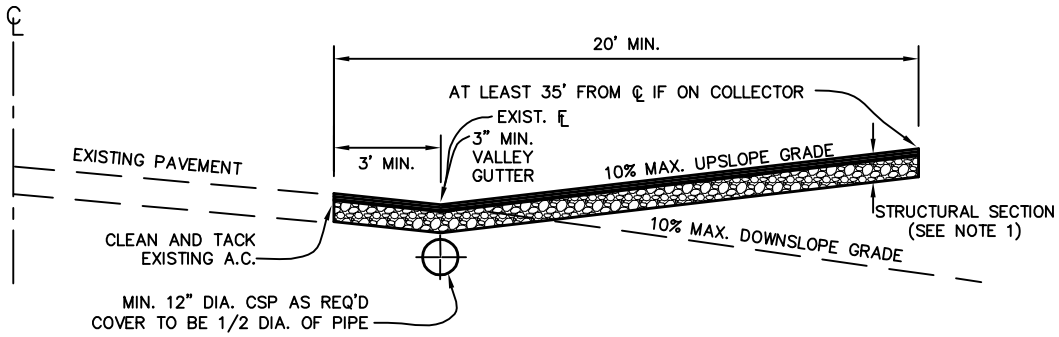

PROFILE

NOTES:

COUNTY ROAD SPEED

	25	30	35	40	45	50	55
A	70° – 110°						
E	250	300	350	400	450	500	550

E = 200' MINIMUM SIGHT DISTANCE FOR LOCAL ST., 100' FOR A CUL-DE-SAC.

A = ANGLE OF DRIVEWAY CENTERLINE IN RELATION TO ROAD CENTERLINE, THE ANGLE WILL BE BETWEEN 70°–100°

1. DRIVEWAY STRUCTURAL SECTION IS 2 1/2" ASPHALT CONCRETE AND 4" OF AGGREGATE BASE.
2. THOSE DRIVEWAYS EXCEEDING 20%, EITHER UP OR DOWN IN GRADE, WILL REQUIRE A GRADING PERMIT.
3. NO PORTION OF A DRIVEWAY WILL BE WITHIN 25' FROM A RADIUS RETURN, NOR 10' FROM A FIRE HYDRANT.
4. MINOR COLLECTORS WILL REQUIRE MAXIMUM WIDTH DIMENSION ON DRIVEWAY.

NOT TO SCALE

GENERATED	REVISIONS		
NO.			
DATE: 03/16/90			
DESIGNED:			
DRAWN: JM/SR/BS			
CHECKED: SKP			
APPROVED:			

APPROVED: Scott Claudel
DIRECTOR OF TRANSPORTATION

Steven K. Payne C33427
SENIOR CIVIL ENGINEER P.E. NO.

EL DORADO COUNTY
DEPARTMENT OF TRANSPORTATION
DESIGN STANDARDS

EL DORADO COUNTY DOT DEPT. OF TRANSPORTATION

DRIVEWAY CONNECTION
SINGLE UNIT RESIDENCE TO LOCAL ROAD OR MINOR COLLECTOR

STD. PLAN
103B-1

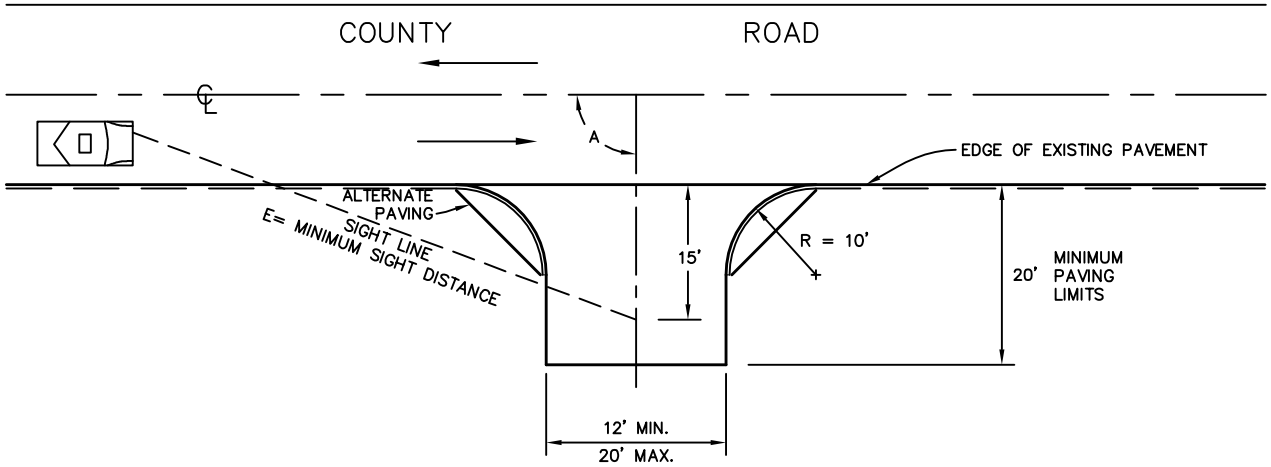

PLAN

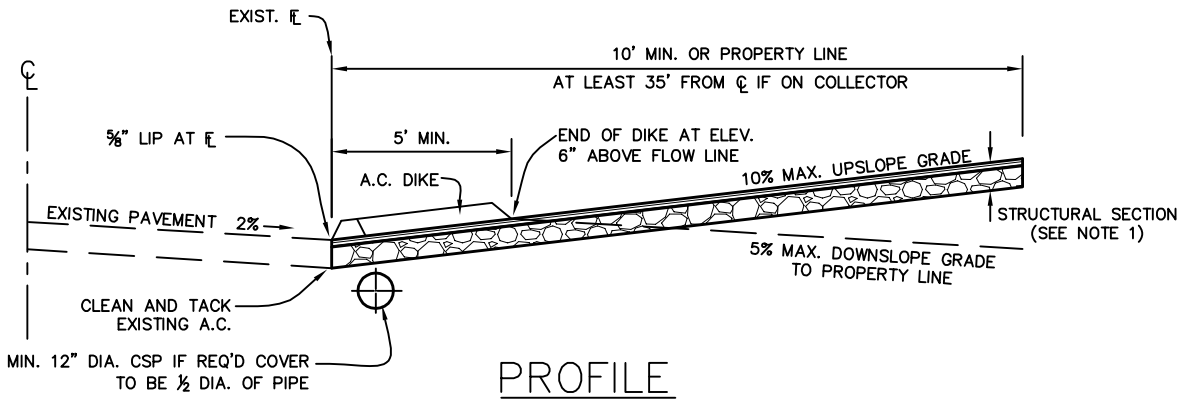

PROFILE

NOTES:

COUNTY ROAD SPEED

	25	30	35	40	45	50	55
A	70° – 110°						
E	250	300	350	400	450	500	550

E = 200' MINIMUM SIGHT DISTANCE FOR LOCAL ST., 100' FOR A CUL-DE-SAC.

A = ANGLE OF DRIVEWAY CENTERLINE IN RELATION TO ROAD CENTERLINE, THE ANGLE WILL BE BETWEEN 70°–110°

1. DRIVEWAY STRUCTURAL SECTION IS 2 1/2" ASPHALT CONCRETE AND 4" OF AGGREGATE BASE.
2. THOSE DRIVEWAYS EXCEEDING 20%, EITHER UP OR DOWN IN GRADE, WILL REQUIRE A GRADING PERMIT.
3. NO PORTION OF A DRIVEWAY WILL BE WITHIN 25' FROM A RADIUS RETURN, NOR 10' FROM A FIRE HYDRANT.

NOT TO SCALE

GENERATED	REVISIONS			APPROVED:
NO.				Scott Clardel
DATE: 03/16/90				DIRECTOR OF TRANSPORTATION
DESIGNED:				
DRAWN: JM/SR/BS				
CHECKED: SKP				Stephen K. Pope C33427
APPROVED:				SENIOR CIVIL ENGINEER P.E. NO.

EL DORADO COUNTY
DEPARTMENT OF TRANSPORTATION
DESIGN STANDARDS

DRIVEWAY CONNECTION
SINGLE UNIT RESIDENCE
CLASS 1 SUBDIVISION
ONLY WHERE AC DIKE EXISTS

STD. PLAN
103B-2

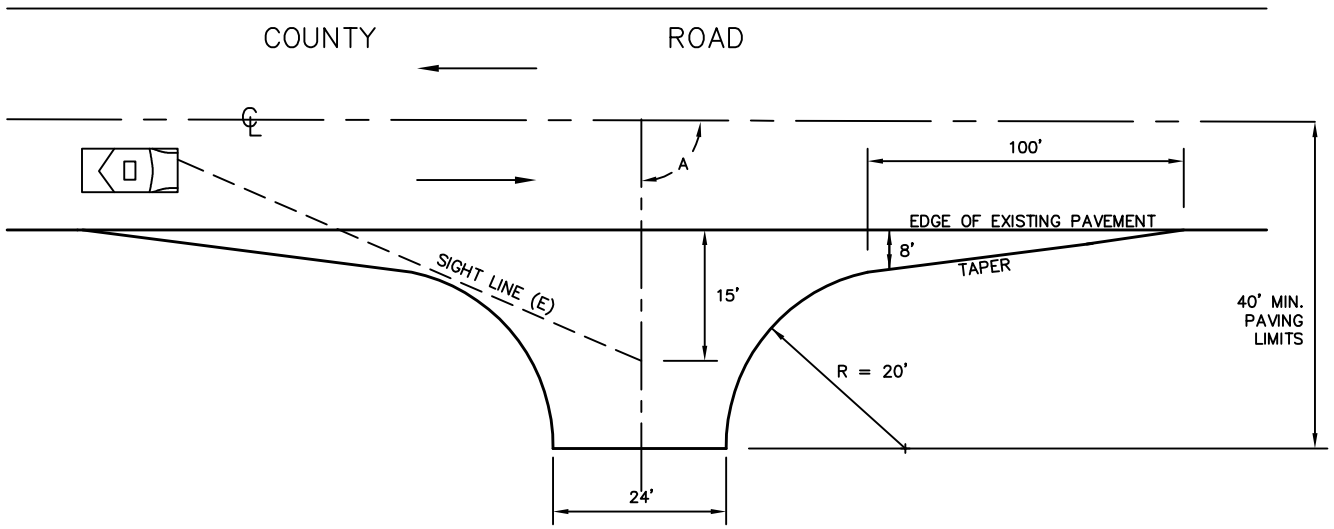

PLAN

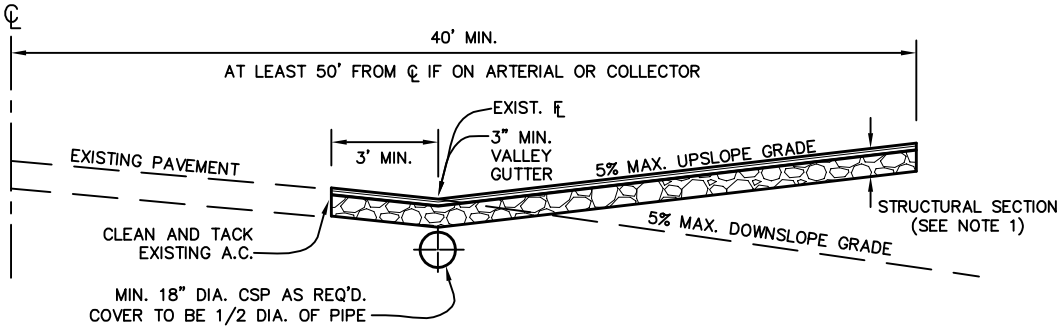

PROFILE

NOTES:

ENCROACHMENT CLASSIFICATION	
	I II III IV
A	70° – 110°
E	10 TIMES THE OPERATIONAL SPEED OF TRAFFIC
W	24' MAX.

1. THE STRUCTURAL SECTION IS 2 1/2" OF ASPHALT CONCRETE PER CALTRANS SPEC. SECTION 39, OVER 6" OF CLASS II AGGREGATE BASE PER CALTRANS SPECS.
2. ADDITIONAL DRAINAGE STRUCTURES NEEDED IF HYDRAULIC STUDIES WARRANT.

NOT TO SCALE

GENERATED	REVISIONS			APPROVED:
NO.				Scott Clardel
DATE: 04/05/90				DIRECTOR OF TRANSPORTATION
DESIGNED:				Steven K Payne C33427
DRAWN: JM/SR/BS				SENIOR CIVIL ENGINEER P.E. NO.
CHECKED: SKP				
APPROVED:				

EL DORADO COUNTY
DEPARTMENT OF TRANSPORTATION
DESIGN STANDARDS

I LOCAL ACCESS ROAD TO COLLECTOR/ARTERIAL
II MAJOR COMMERCIAL CONNECT. (WITHOUT C & G) TO MAJ. COLL.
III MINOR COMMERCIAL TO MAJOR COLLECTOR
IV MULTI-UNIT RESIDENTIAL TO MAJOR COLLECTOR

STD. PLAN

103D

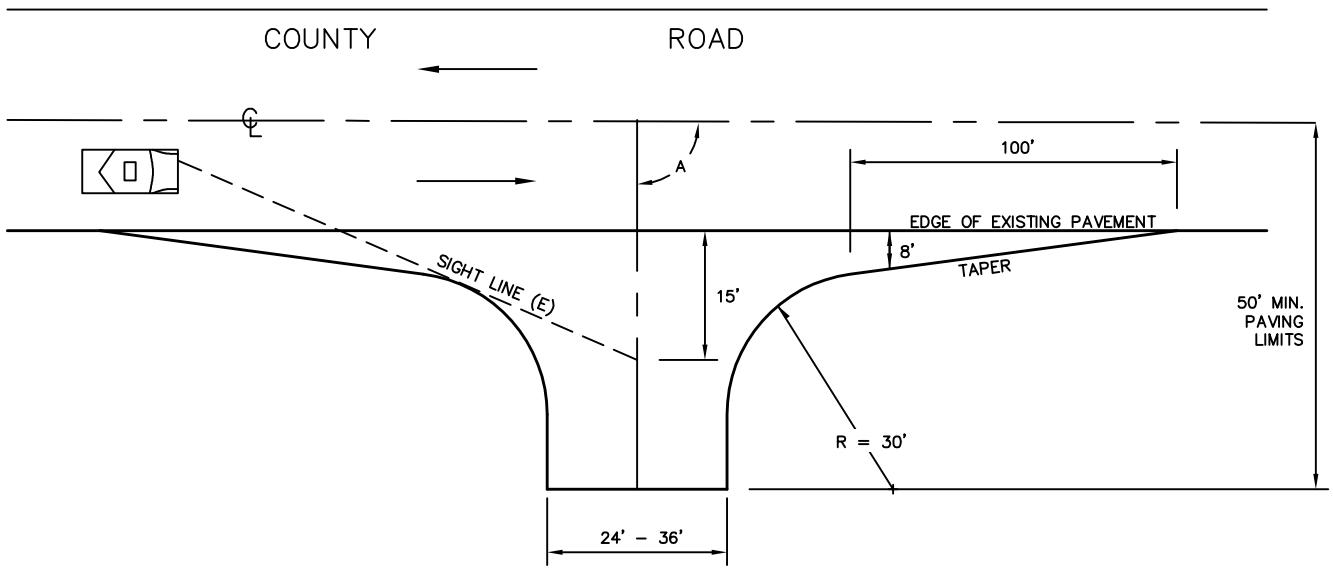

PLAN

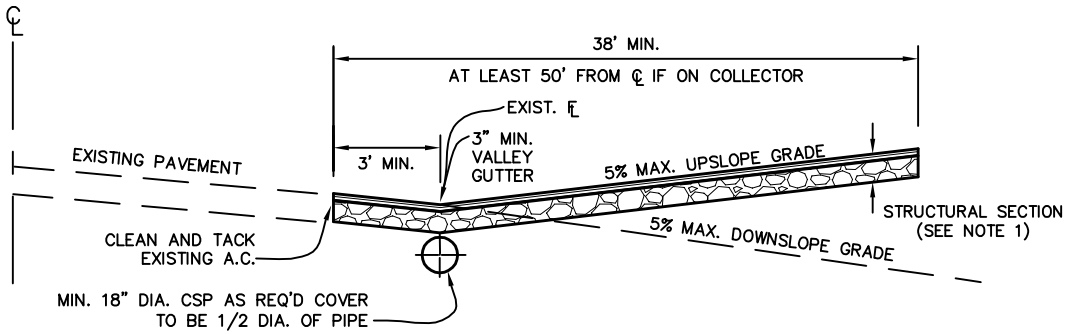

PROFILE

NOTES:

A	70° – 110°
E	10 TIMES THE OPERATIONAL SPEED OF TRAFFIC

1. THE STRUCTURAL SECTION IS 2 1/2" OF ASPHALT CONCRETE PER CALTRANS SPEC. SECTION 39. OVER 6" OF CLASS II AGGREGATE BASE PER CALTRANS SPECS.
2. ADDITIONAL DRAINAGE STRUCTURES NEEDED IF HYDRAULIC STUDIES WARRANT.

NOT TO SCALE

GENERATED	REVISIONS	APPROVED:	EL DORADO COUNTY DEPARTMENT OF TRANSPORTATION DESIGN STANDARDS	MINOR COLLECTOR TO COLLECTOR/ARTERIAL	STD. PLAN 103E
NO.		Scott Clardel			
DATE: 03/17/90		DIRECTOR OF TRANSPORTATION			
DESIGNED:		Steven K Payne C33427			
DRAWN: JM/SR/BS		SENIOR CIVIL ENGINEER P.E. NO.			
CHECKED: SKP					
APPROVED:					

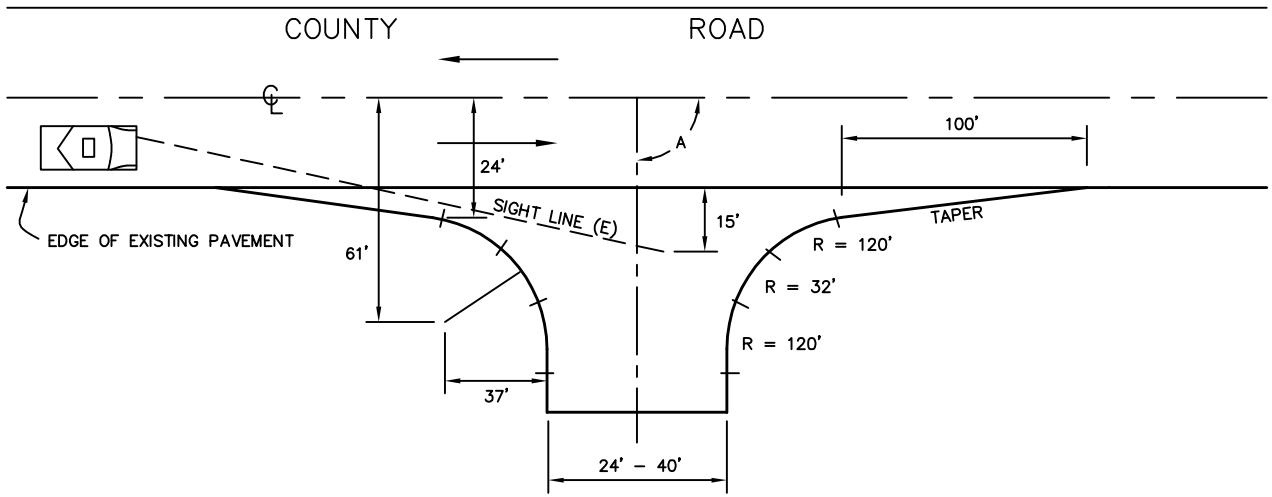

PLAN

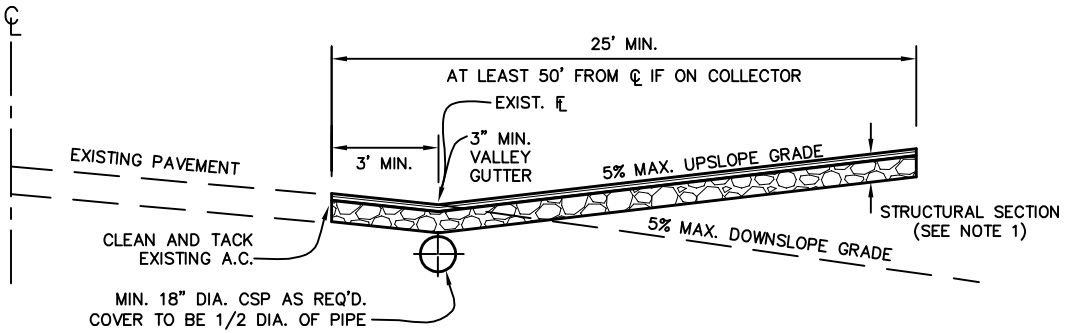

PROFILE

NOTES:

A	70° – 110°
E	10 TIMES THE OPERATIONAL SPEED OF TRAFFIC

1. THE STRUCTURAL SECTION IS 2 1/2" OF ASPHALT CONCRETE PER CALTRANS SPEC. SECTION 39. OVER 6" OF CLASS II AGGREGATE BASE PER CALTRANS SPECS.
2. ADDITIONAL DRAINAGE STRUCTURES NEEDED IF HYDRAULIC STUDIES WARRANT.

NOT TO SCALE

GENERATED	REVISIONS	APPROVED:	EL DORADO COUNTY DEPARTMENT OF TRANSPORTATION DESIGN STANDARDS	MAJOR COLLECTOR TO COLLECTOR/ARTERIAL	STD. PLAN 103F
NO.		Scott Clardel			
DATE: 03/17/90		DIRECTOR OF TRANSPORTATION			
DESIGNED:		Steven K Pope C33427			
DRAWN: JM/SR/BS		SENIOR CIVIL ENGINEER P.E. NO.			
CHECKED: SKP					
APPROVED:					

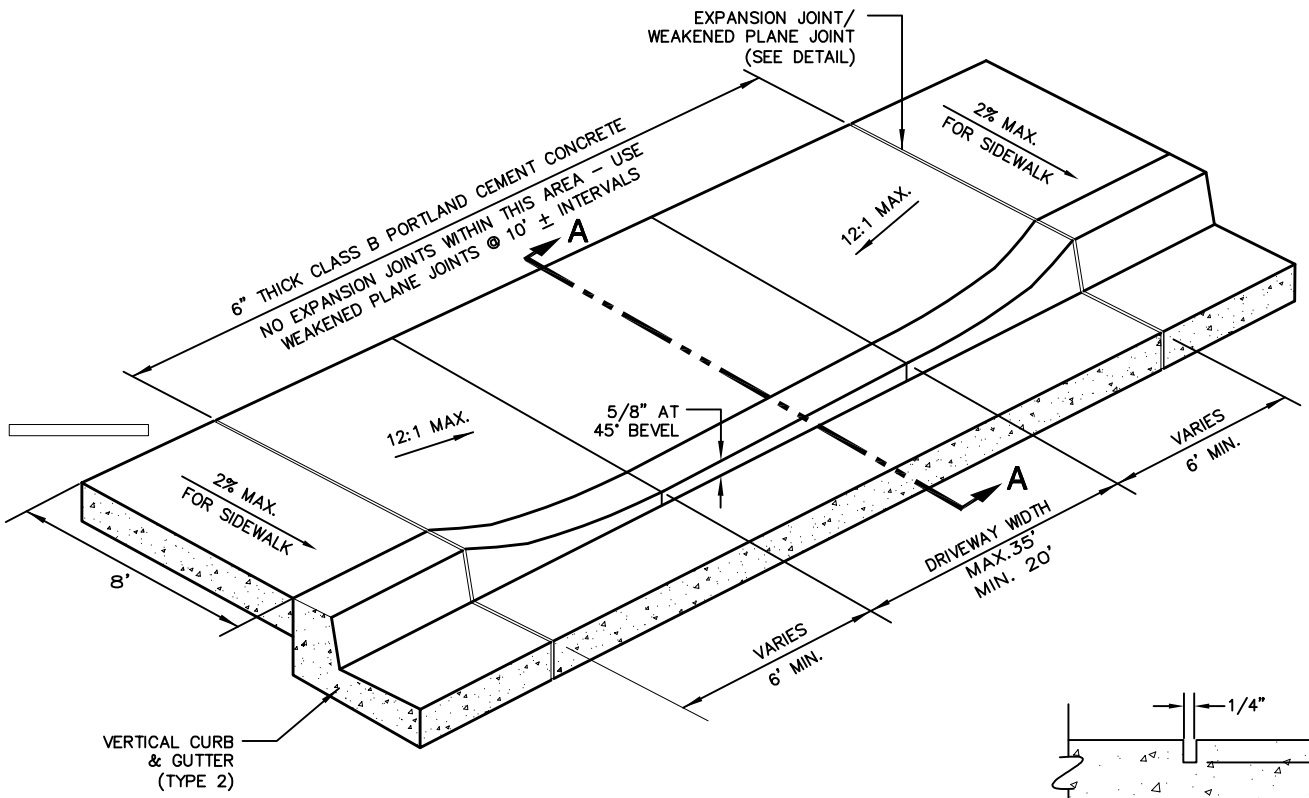

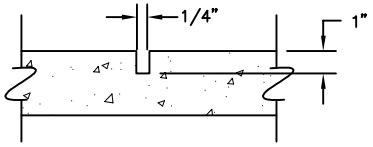

EXPANSION JOINT/
WEAKENED PLANE JOINT
DETAIL

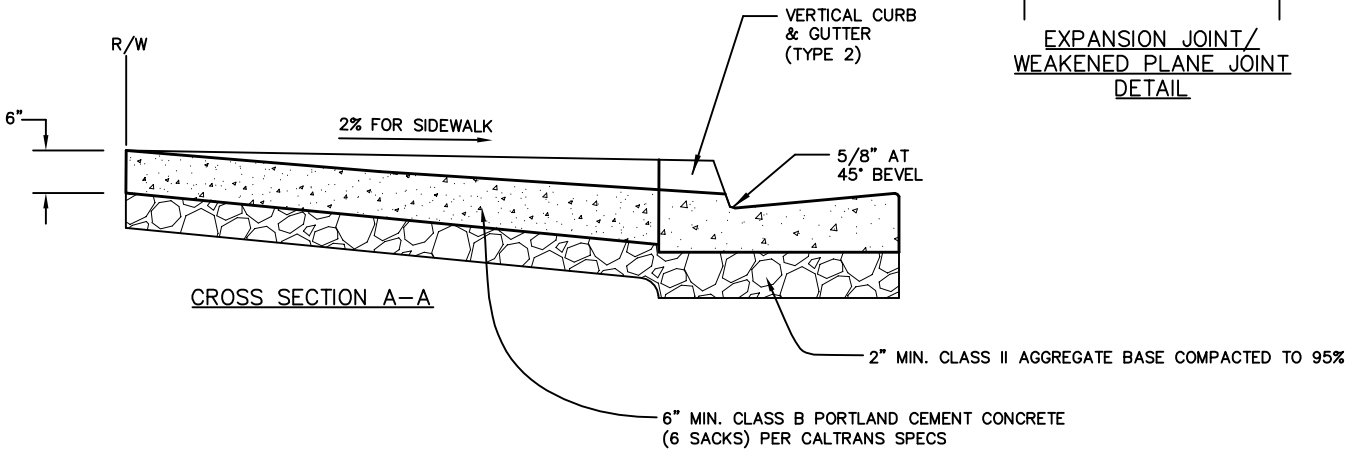

CROSS SECTION A–A

NOTES:

1. WHERE A COMMERCIAL DRIVE IS TO BE PLACED IN EXISTING ROLLED CURB, TWO FEET OF STANDARD (TYPE 2) CURB AND GUTTER WITH 6 FOOT TRANSITIONS SHALL BE PLACED ON BOTH SIDES OF THE DRIVEWAY.
2. NO VERTICAL CURB AND GUTTER ABOVE 3000 FT. ELEVATION.
3. 2500 P.S.I. (POUNDS PER SQUARE INCH) STRENGTH REQUIRED ON CONCRETE AT 28 DAYS.
4. MINIMUM SIGHT DISTANCE ALLOWABLE IS 200' OR 10% OF THE COUNTY ROAD SPEED.

NOT TO SCALE

GENERATED	REVISIONS			APPROVED:	EL DORADO COUNTY		COMMERCIAL DRIVEWAY FOR VERTICAL CURB LOCATIONS	STD. PLAN
NO.				Scott Clardel	DEPARTMENT OF TRANSPORTATION			
DATE: 03/17/90				DIRECTOR OF TRANSPORTATION				
DESIGNED:				Steven K. Payne C33427	DESIGN STANDARDS			103G
DRAWN: JM/SR/BS								
CHECKED: SKP								
APPROVED:				SENIOR CIVIL ENGINEER P.E. NO.				

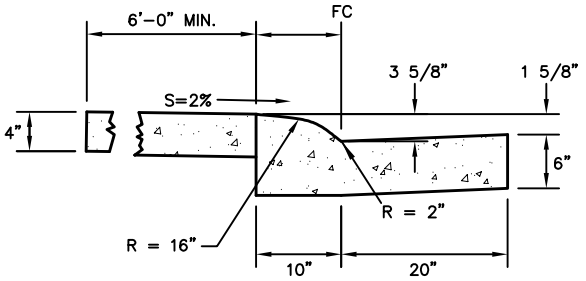

TYPE 1
ROLLED CURB AND GUTTER
(SEE NOTE 1, 2 & 3)

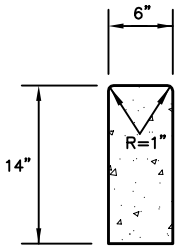

TYPE 3
BARRIER CURB
(SEE NOTE 4)

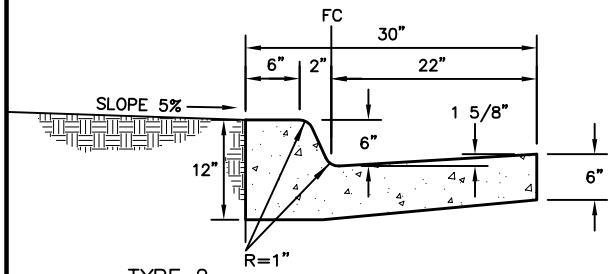

TYPE 2
VERTICAL CURB AND GUTTER
(SEE NOTE 1, 2 & 3)

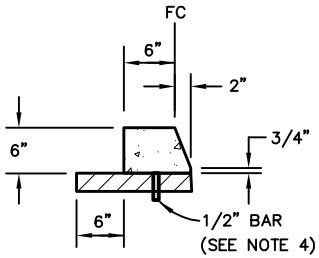

TYPE 4
BARRIER CURB
(SEE NOTE 4)

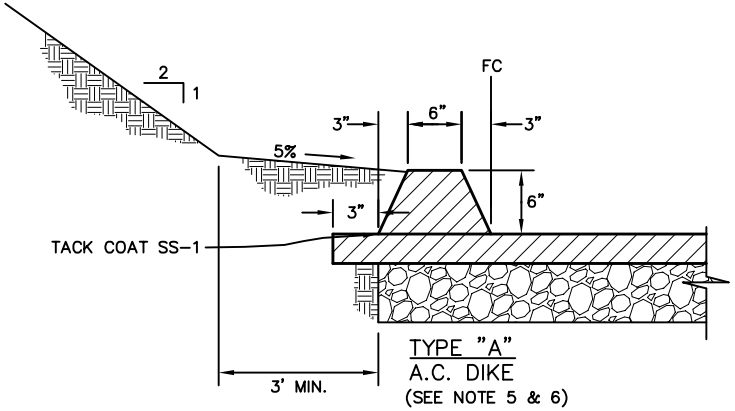

TYPE "A"
A.C. DIKE
(SEE NOTE 5 & 6)

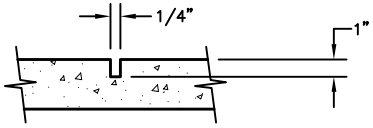

WEAKENED PLANE
JOINT DETAIL
(SEE NOTE 3)

NOTES:

1. ALL PORTLAND CEMENT CONCRETE SHALL BE PER CALTRANS SPECIFICATIONS, SECTION 78.
2. ½" x 18" LONG DOWEL MINIMUM 4 FT. CENTER TO CENTER SPACING, OR APPOXY.
3. PLACE ½" TRANSVERSE EXPANSION JOINTS OF ASPHALT IMPREGNATED CELOTEX IN SIDEWALK, CURB & GUTTER AT 20' INTERVALS. ALL CONCRETE TO BE CLASS "B" AND SCORED EVERY 10'.
4. FOR TYPE 4 & 5 BARRIER CURBS LOCATE WEAKENED PLANE JOINTS AT 10' NTERVALS. USE 5" INTERVALS FOR RADII LESS THAN 25'
5. ASPHALT CONCRETE SHALL BE CLASS B PER CALTRANS SPECIFICATIONS SECTION 39,– SEE GENERAL NOTE PAGE.
6. AC DIKE TO BE USED WHERE EXISTING CONDITIONS WARRANT. TO BE USED WITH COUNTY ENGINEER'S APPROVAL.

NOT TO SCALE

GENERATED	REVISIONS			APPROVED:
NO.				Scott Clardel
DATE: 03/14/90				DIRECTOR OF TRANSPORTATION
DESIGNED:				Steven K Pope C33427
DRAWN: JM/SR/BS				SENIOR CIVIL ENGINEER P.E. NO.
CHECKED: SKP				
APPROVED:				

EL DORADO COUNTY
DEPARTMENT OF TRANSPORTATION
DESIGN STANDARDS

CONCRETE
CURB & GUTTERS
A.C. DIKE

STD. PLAN
104

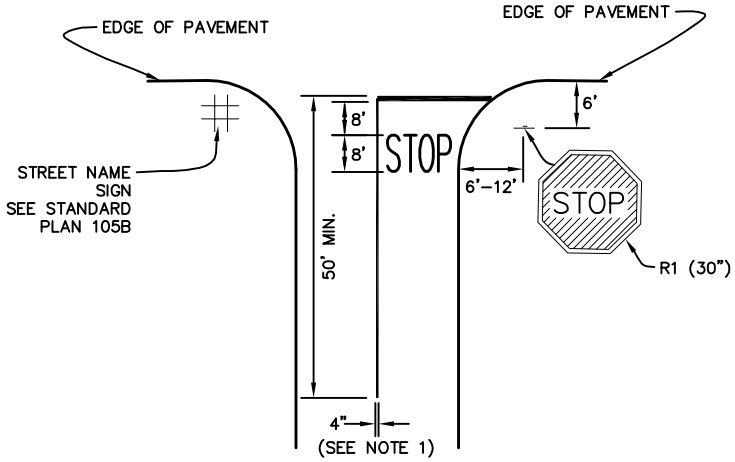

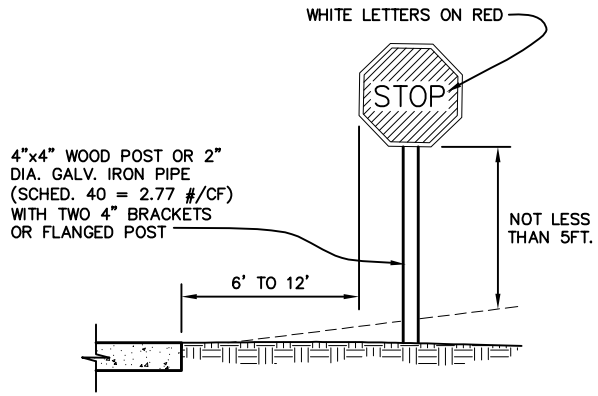

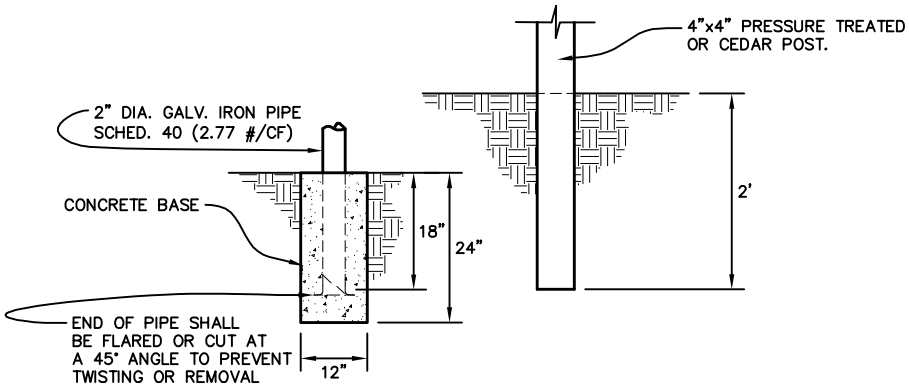

ALTERNATE BASE

NOTES:

1. 4" STRIPE TO BE YELLOW REFLECTORIZED TRAFFIC PAINT. TWO 4" STRIPES WILL BE USED IF ADT'S WARRANT.
2. 12" STOP BAR TO BE WHITE REFLECTORIZED TRAFFIC PAINT AND LOCATED TO PROVIDE MAXIMUM VISIBILITY ALONG THROUGH STREET.
3. ALL SIGNS SHALL BE FABRICATED OF HIGH INTENSITY REFLECTIVE SHEETING ON AN ALUMINUM BLANK PER EL DORADO COUNTY SPECIFICATIONS.

NOT TO SCALE

GENERATED	REVISIONS			APPROVED:	EL DORADO COUNTY		STOP SIGN	STD. PLAN
NO.				Scott Clardel	DEPARTMENT OF TRANSPORTATION			
DATE: 03/14/90				DIRECTOR OF TRANSPORTATION				
DESIGNED:				Steven K Payne C33427	DESIGN STANDARDS			105A
DRAWN: JM/SR/BS								
CHECKED: SKP								
APPROVED:				SENIOR CIVIL ENGINEER P.E. NO.				

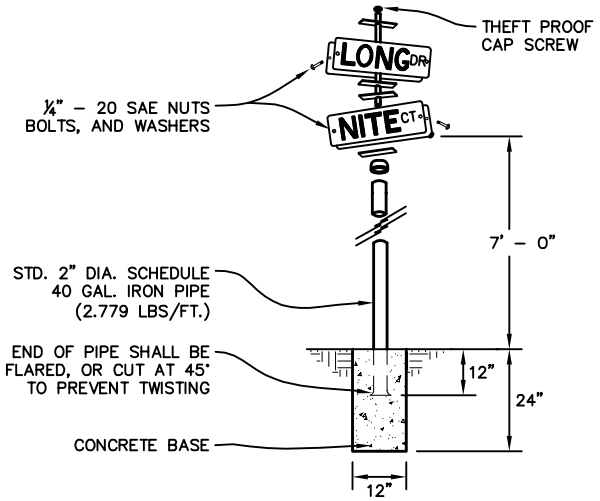

COUNTY ROAD STREET SIGN (SEE NOTE 1)

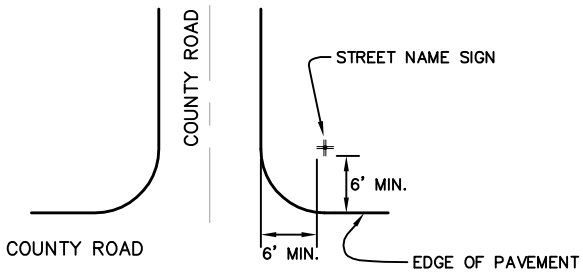

LOCATION OF COUNTY ROAD STREET SIGN

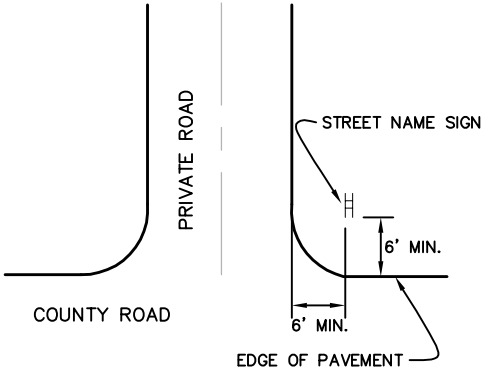

LOCATION OF PRIVATE STREET SIGN

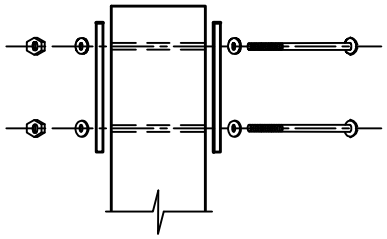

PRIVATE ROAD
TYPICAL SIGN ASSEMBLY

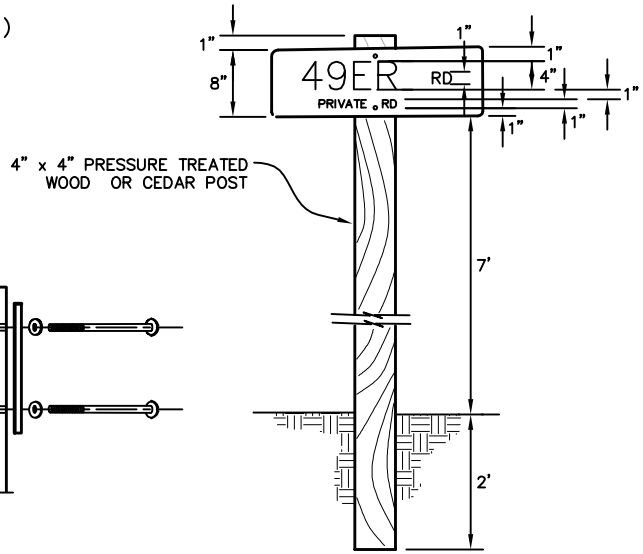

PRIVATE ROAD STREET SIGN

(SEE NOTE 2)

NOTES:

1. STREET NAME PANELS FOR COUNTY ROADS SHALL BE FLAT ALUMINUM PLATES, 0.08" THICK. PANELS SHALL BE 6" x 24" OR 6" x 30", DEPENDING ON STREET NAME LENGTH. LETTERING TO BE 1" AND 4" SERIES "B", SILVER REFLECTIVE SHEETING ON GREEN SCOT–LITE BACKING.
2. STREET NAME PANELS FOR PRIVATE ROADS SHALL BE FLAT ALUMINUM PLATES, 0.08" THICK. PANELS SHALL BE 8" x 30" OR 8" x 24", DEPENDING ON STREET NAME LENGTH. LETTERING TO BE 1" AND 4" SERIES "B", SILVER REFLECTIVE SHEETING ON GREEN SCOT–LITE BACKING.

NOT TO SCALE

GENERATED	REVISIONS			APPROVED:	EL DORADO COUNTY		STREET SIGN	STD. PLAN
NO.				Scott Clardel	DEPARTMENT OF TRANSPORTATION			
DATE: 3/14/90				DIRECTOR OF TRANSPORTATION				
DESIGNED:				Steven K Payne C33427	DESIGN STANDARDS			105B
DRAWN: JM/SR/BS				SENIOR CIVIL ENGINEER P.E. NO.				
CHECKED: SKP								
APPROVED:								

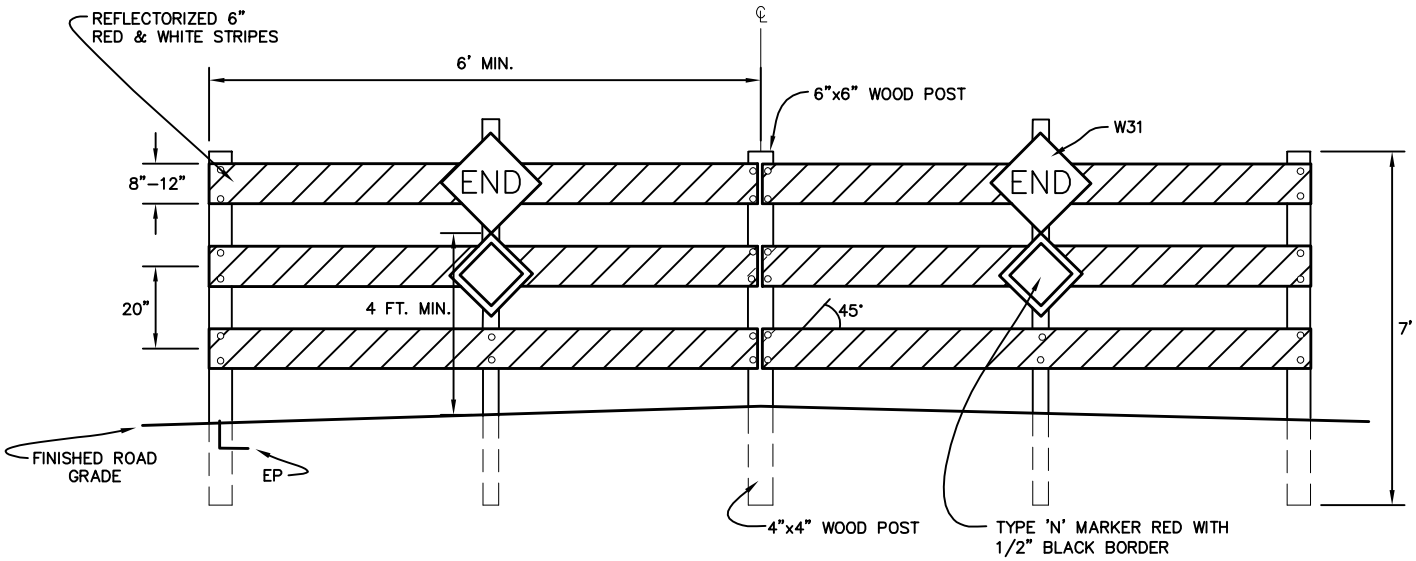

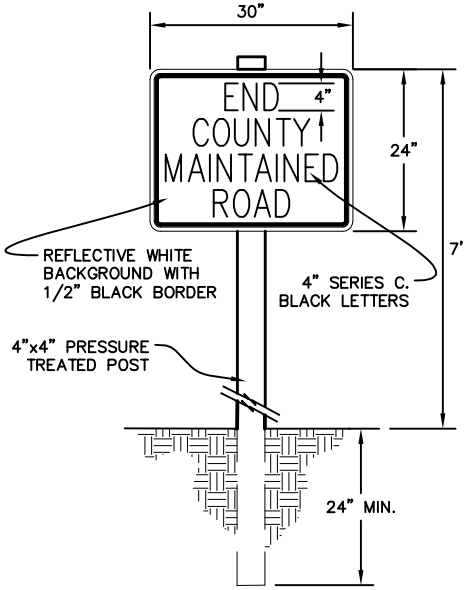

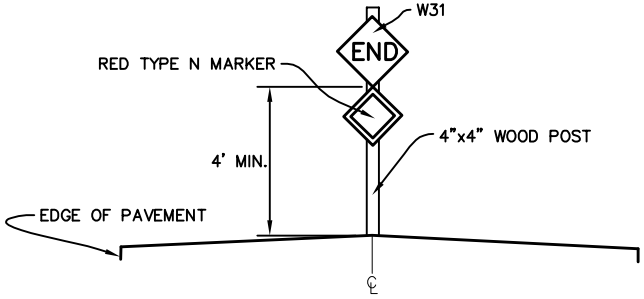

MINOR STREET

NOTES:

1. RED AND WHITE BARRICADES ARE TO WARN AND ALERT DRIVERS OF THE TERMINOUS OF A ROAD, STREET OR HIGHWAY IN OTHER THAN CONSTRUCTION OR MAINTAINENANCE AREAS. THE BARRICADES ARE TO MEET THE DESIGN CRITERIA OF SECTION 6C–8 FOR A TYPE III BARRICADE, EXCEPT THAT THE COLORS OF THE STRIPES SHALL BE REFLECTORIZED WHITE AND RED.

NOT TO SCALE

GENERATED	REVISIONS			APPROVED:
NO.				Scott Clardel
DATE: 3/13/90				DIRECTOR OF TRANSPORTATION
DESIGNED:				Steven K Payne C33427
DRAWN: JM/SR/BS				SENIOR CIVIL ENGINEER P.E. NO.
CHECKED: SKP				
APPROVED:				

EL DORADO COUNTY
DEPARTMENT OF TRANSPORTATION
DESIGN STANDARDS

BARRICADES
ROAD ENDS SIGN
DETAIL

STD. PLAN
105C

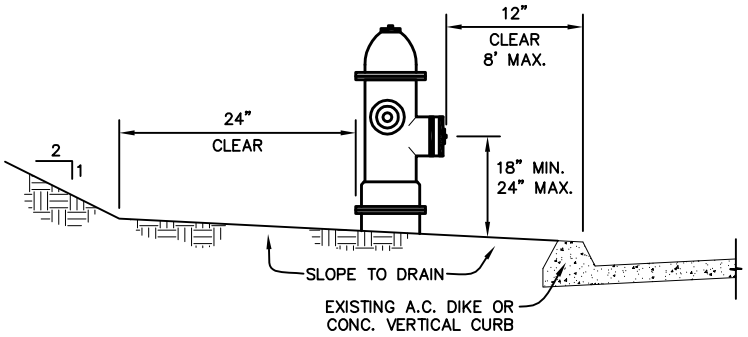

FIRE HYDRANT BEHIND VERTICAL CURB & GUTTER

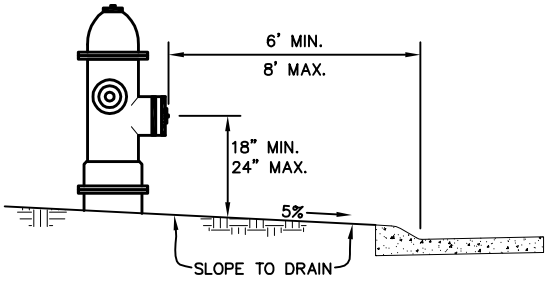

BEHIND ROLLED CURB & GUTTER

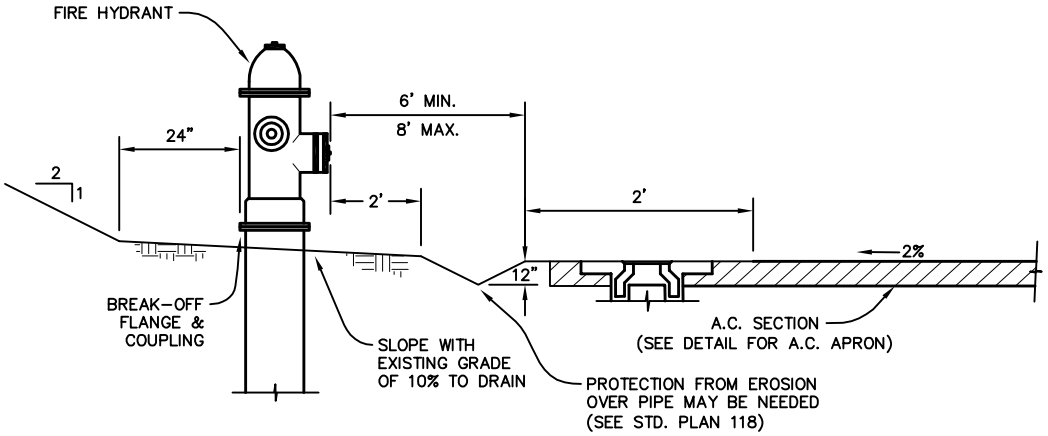

FIRE HYDRANT WITHOUT CURB & GUTTER

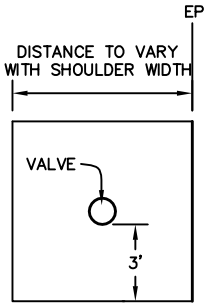

NOTES:

1. THE FIRE HYDRANT IS TO BE PLACED BEHIND THE DRAINAGE DITCH AND NO FURTHER THAN 8 FEET FROM DRIVEABLE SHOULDER SURFACE OR BACK OF CURB.
2. ALL VALVE BOXES SET IN THE A.C. OR CONCRETE TO BE F.G. MINUS 1/4".
3. CONTACT LOCAL WATER AGENCY FOR FIRE HYDRANT AND VALVE ASSEMBLY REQUIREMENTS.

NOT TO SCALE

GENERATED	REVISIONS			APPROVED:	EL DORADO COUNTY		FIRE HYDRANT LOCATION DETAIL	STD. PLAN
NO.				Scott Clendel	DEPARTMENT OF TRANSPORTATION		BEHIND CURB AND GUTTER & WITHOUT CURB AND GUTTER	106
DATE: 04/17/90				DIRECTOR OF TRANSPORTATION	DESIGN STANDARDS			
DESIGNED:				Steven K Payne C33427				
DRAWN: JM/SR/BS				SENIOR CIVIL ENGINEER P.E. NO.				
CHECKED: SKP								
APPROVED:								

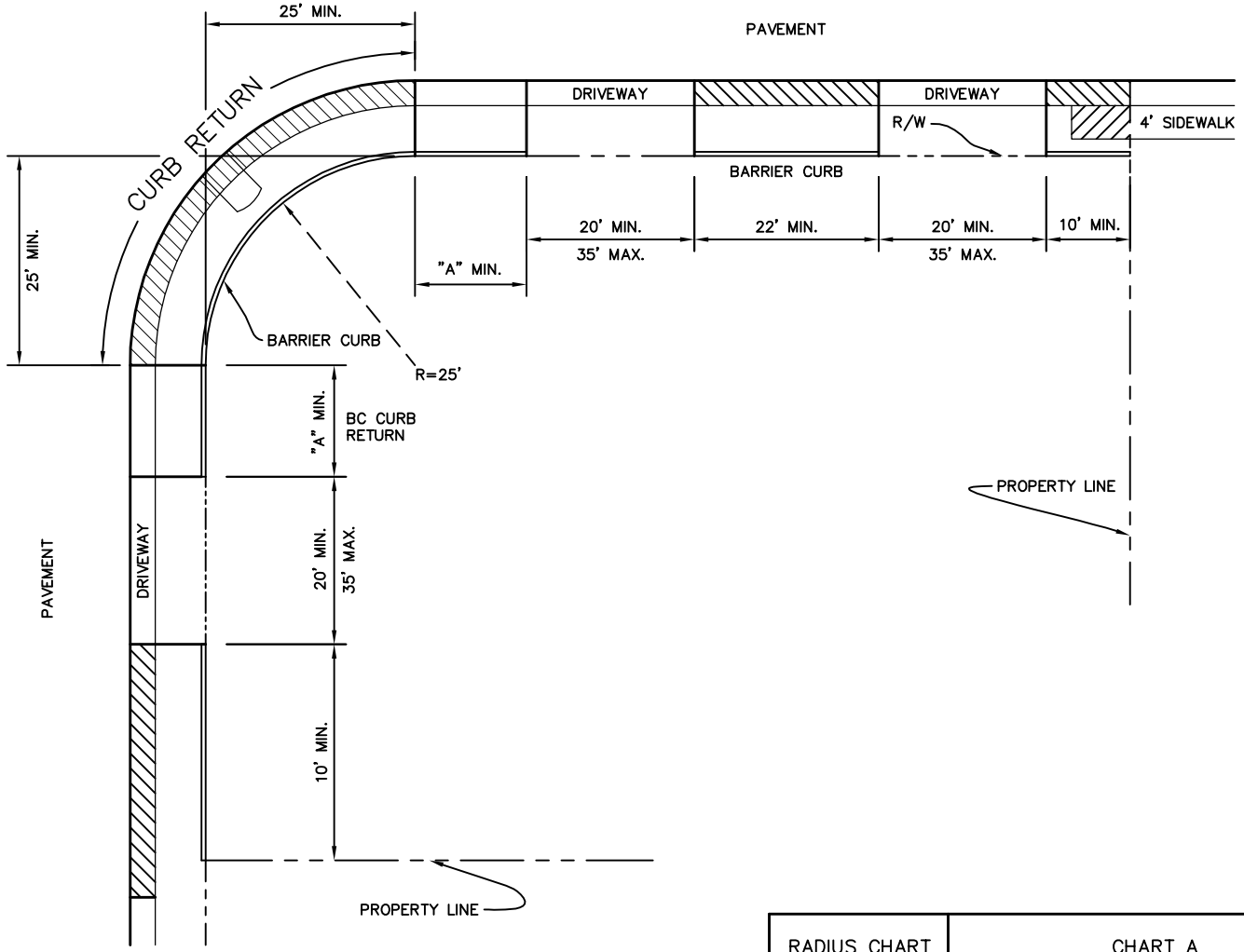

RADIUS CHART	CHART A	
40'	ARTERIAL	250' *
35'	MAJOR COLLECTOR	150' *
25'	MINOR COLLECTOR	100' *
25'	ACCESS ROAD	25'

* LESS WITH COUNTY ENGINEER'S APPROVAL

NOTES:

1. FRONTAGE MEASURED ALONG R/W LINE AND FROM THE INTERSECTION OF PROJECTED R/W TANGENTS ON LOT CORNERS.
2. DRIVEWAYS NOT PERMITTED WITHIN 10' OF PROPERTY LINES. SEE CHART A FOR LOCATION OF DRIVEWAYS IN RELATIONSHIP TO INTERSECTING TANGENTS.
3. 22' MINIMUM ALLOWABLE DISTANCE BETWEEN DRIVEWAYS FOR LESS THAN 200' FRONTAGE AND 45' MINIMUM ALLOWABLE DISTANCE FOR FRONTAGE GREATER THAN 200'. 20' MINIMUM AND 35' MAXIMUM DRIVEWAY WIDTH MEASURED AT R/W LINE. SPECIFIC CASES TO BE SUBMITTED FOR APPROVAL.
4. NO PART OF A DRIVEWAY MAY FALL WITHIN A CURB RETURN OR WITHIN THE LIMITS SHOWN IN CHART A.
5. HANDICAPPED RAMPS @ SIDEWALK INTERSECTIONS PER CALTRANS STANDARD PLAN N8-B, CASE E.
6. SEE GENERAL NOTE PAGE REGARDING DRIVEWAY CEMENT.

NOT TO SCALE

GENERATED	REVISIONS			APPROVED:
NO.				Scott Clardel
DATE: 03/14/90				DIRECTOR OF TRANSPORTATION
DESIGNED:				Steven K Payne C33427
DRAWN: JM/SR/BS				SENIOR CIVIL ENGINEER P.E. NO.
CHECKED: SKP				
APPROVED:				

EL DORADO COUNTY
DEPARTMENT OF TRANSPORTATION
DESIGN STANDARDS

COMMERCIAL DRIVEWAY REGULATIONS

STD. PLAN
109

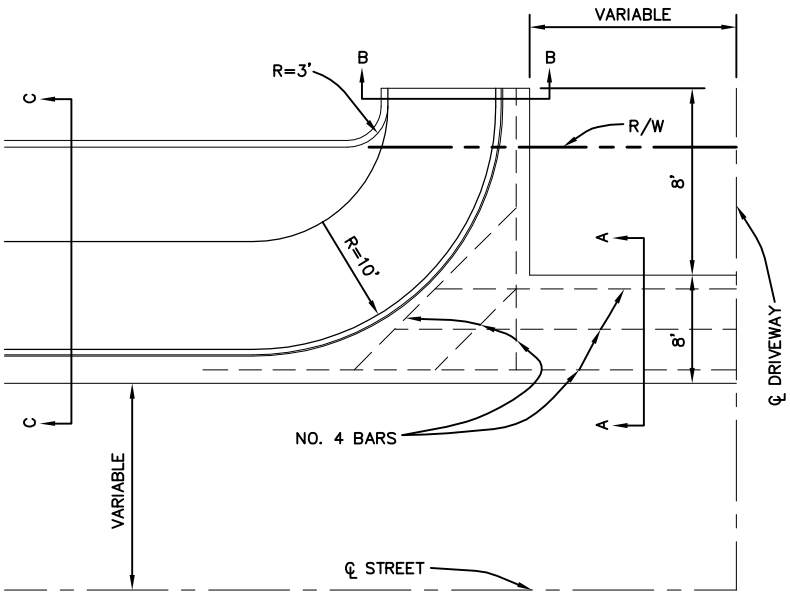

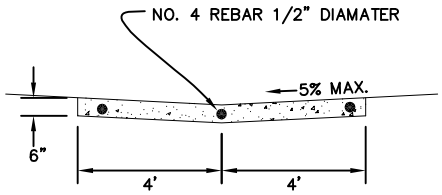

SECTION A–A

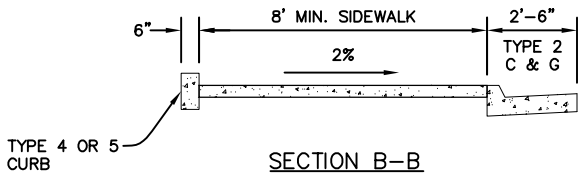

SECTION B–B
(SEE NOTE 2)

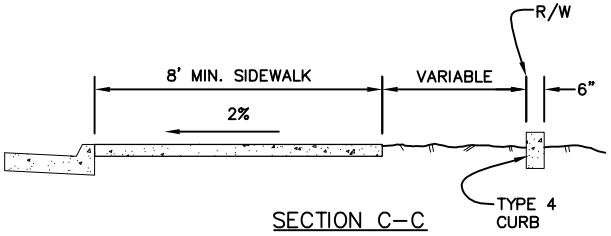

SECTION C–C

NOTES:

1. WHEEL CHAIR ACCESS PER CALTRANS STANDARD PLAN N8–B, CASE E.
2. PORTLAND CEMENT CONCRETE SHALL BE IN ACCORDANCE WITH CALTRANS STANDARD SPECIFICATIONS 78.
3. CURBS SHALL BE IN ACCORDANCE WITH STANDARD PLAN 104.

NOT TO SCALE

GENERATED	REVISIONS			APPROVED:	EL DORADO COUNTY		SPECIAL COMMERCIAL FRONTAGE ENTRANCE	STD. PLAN
NO.				Scott Clardel	DEPARTMENT OF TRANSPORTATION			
DATE: 03/14/90				DIRECTOR OF TRANSPORTATION				
DESIGNED:					DESIGN STANDARDS			110
DRAWN: JM/SR/BS				C33427				
CHECKED: SKP				SENIOR CIVIL ENGINEER P.E. NO.				
APPROVED:								

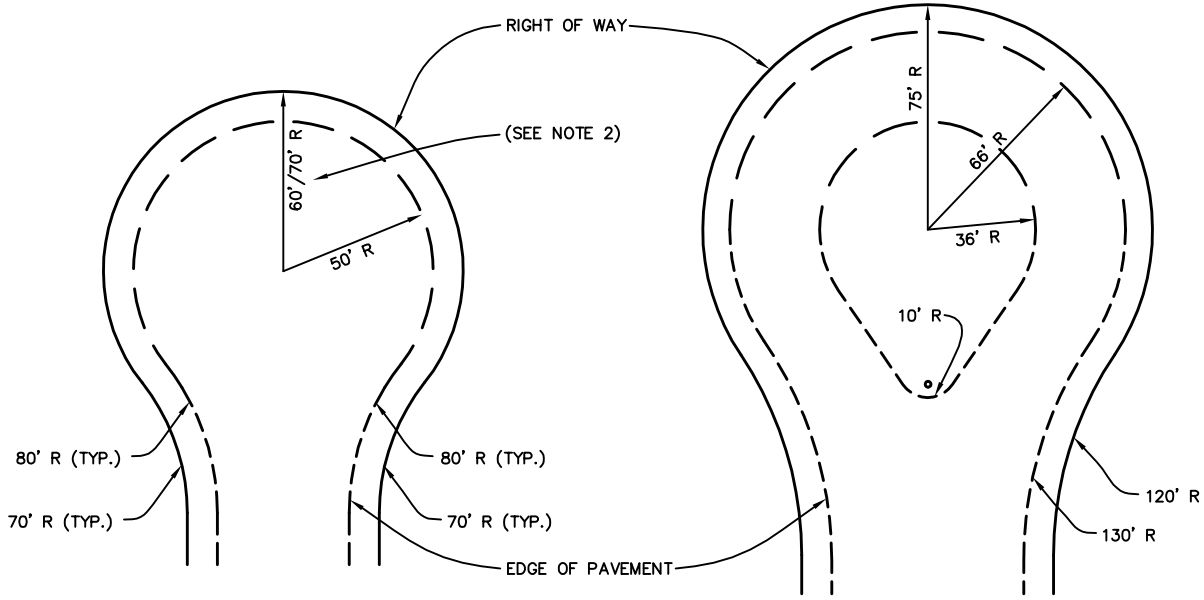

TYPE A
STANDARD

TYPE B
PEAR-SHAPED

NOTES:

1. CUL-DE-SACS MAY BE ASYMMETRICAL TO THE LEFT OR RIGHT OF CENTERLINE.
2. IF FIRE HAZARDS EXIST, 70' MIN. RADIUS REQUIRED.
3. CALTRANS HS-20 CULDESAC DETAIL MAY BE USED WITH COUNTY ENGINEER'S APPROVAL.

NOT TO SCALE

GENERATED	REVISIONS			APPROVED:	EL DORADO COUNTY DEPARTMENT OF TRANSPORTATION DESIGN STANDARDS		CUL-DE-SACS	STD. PLAN 114
NO.								
DATE: 3/17/90				DIRECTOR OF TRANSPORTATION				
DESIGNED:								
DRAWN: JM/SR/BS								
CHECKED: SKP				C33427				
APPROVED:				SENIOR CIVIL ENGINEER P.E. NO.				

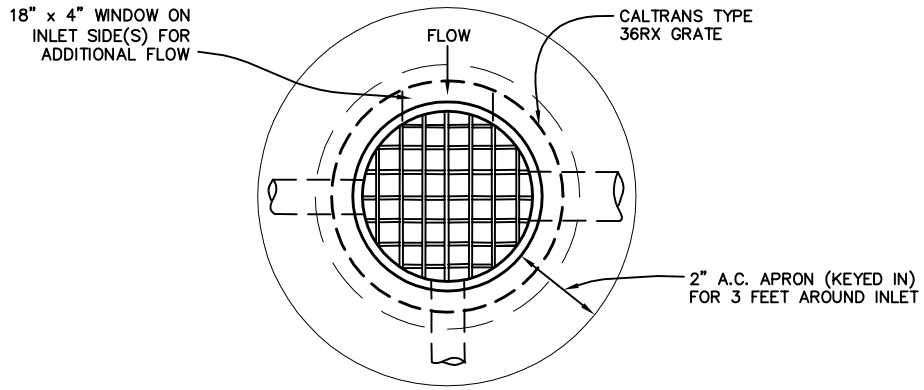

PLAN

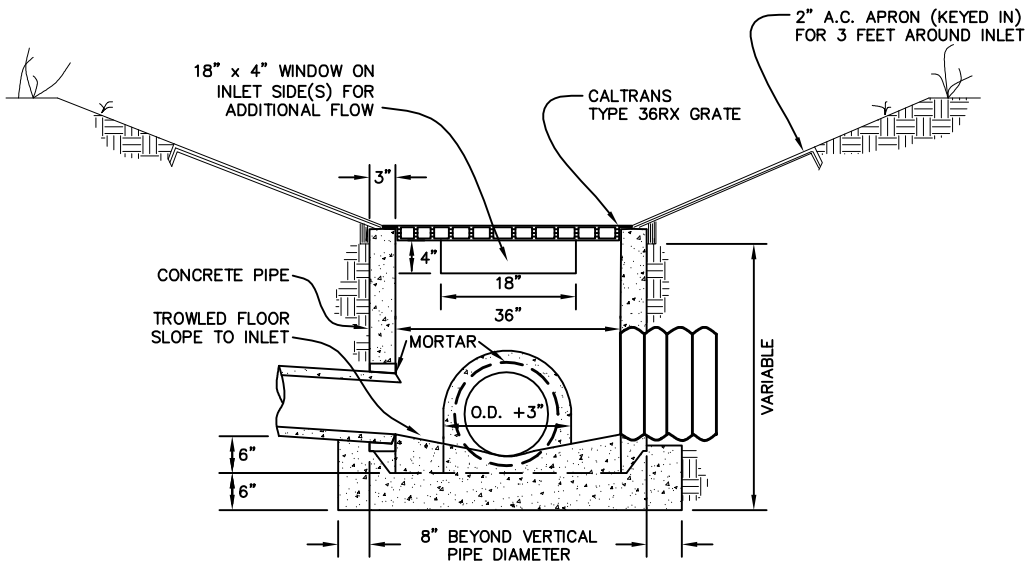

PROFILE

NOTES:

1. IN RURAL CONDITIONS A CALTRANS OMP OR OCP WITH 1/4" STEEL CHECKERED PLATE COVER AND A SINGLE HORIZONTAL GRATE AT 4" O.C. MAY BE USED WITH COUNTY ENGINEER'S APPROVAL.

NOT TO SCALE

GENERATED	REVISIONS			APPROVED:				
NO.				Scott Clardel			EL DORADO COUNTY	GRATED INLET	STD. PLAN
DATE: 1/2/90				DIRECTOR OF TRANSPORTATION			DEPARTMENT OF TRANSPORTATION		
DESIGNED:				Steven K. Pope	C33427		DESIGN STANDARDS		115A
DRAWN: JM/SR/BS				SENIOR CIVIL ENGINEER	P.E. NO.				
CHECKED: SKP									
APPROVED:									

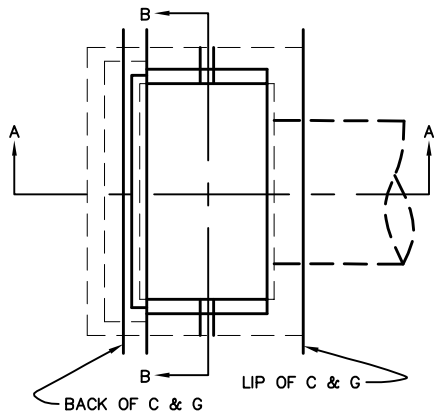

PLAN

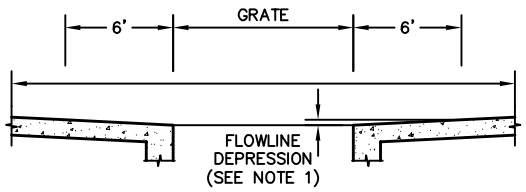

GUTTER FLOWLINE

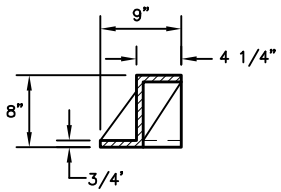

SECTION C–C
OPEN–BACK HOOD

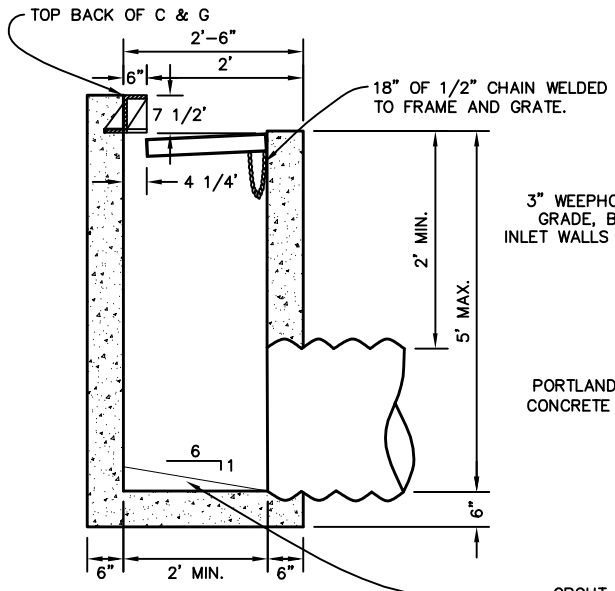

SECTION A–A
TYPE 2 CURB AND GUTTER

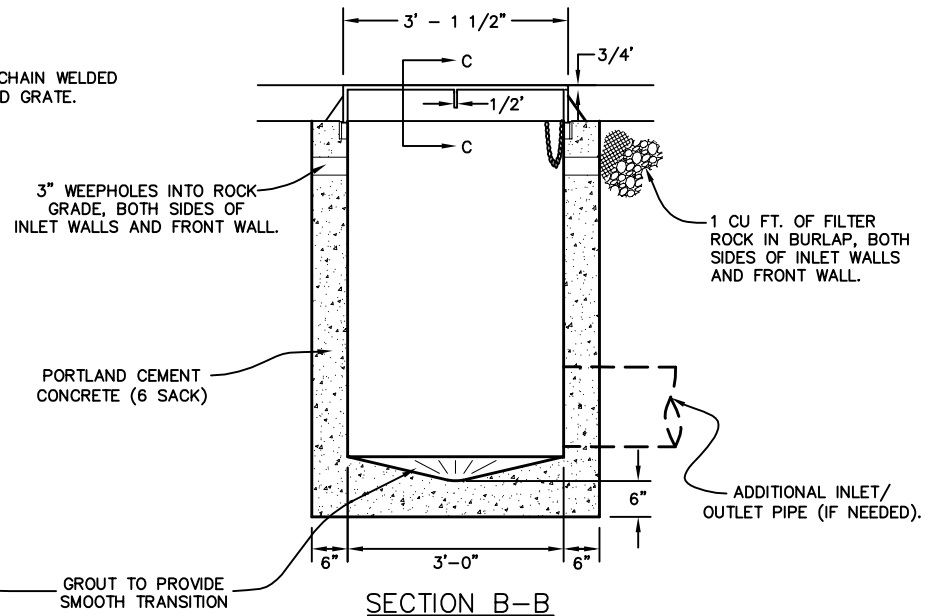

SECTION B–B

NOTES:

1. DEPRESS GRATE 3 7/8" BELOW GUTTER FLOWLINE, ON ROLLED CURB AND GUTTER, AND 1 1/2" ON VERTICAL CURB.
2. FLOOR OF INLET SHALL BE PLACED PRIOR TO OR AT THE SAME TIME AS SIDE WALLS, OR TIED WITH REBAR.
3. FRAME AND GRATE SHALL CONFORM TO STANDARD PLAN 115B PINKERTON FOUNDRY #A–601 OR EQUAL.
4. OPEN–BACK HOOD SHALL BE CAST IRON.
5. THE OUTLET PIPE INVERT SHALL BE AT LEAST ONE INCH BELOW THE LOWEST INLET PIPE INVERT.
6. FOR ROLLED CURB AND GUTTER, 6' TRANSITIONS TO VERTICAL CURB ARE REQUIRED ON BOTH SIDES OF INLET.
7. CONCRETE TO BE SIX SACK MIX FOR ALL DRAINAGE STRUCTURES.
8. 5' MAX. DEPTH FROM FLOWLINE, WITHOUT REINFORCEMENT ADDED.

NOT TO SCALE

GENERATED	REVISIONS			APPROVED:
NO.				Scott Clendel
DATE: 3/17/90				DIRECTOR OF TRANSPORTATION
DESIGNED: TMA				Steven K. Pope C33427
DRAWN: JM/SR/BS				SENIOR CIVIL ENGINEER P.E. NO.
CHECKED: SKP				
APPROVED:				

EL DORADO COUNTY
DEPARTMENT OF TRANSPORTATION
DESIGN STANDARDS

DROP INLET
CALTRANS TYPE B

STD. PLAN
115B

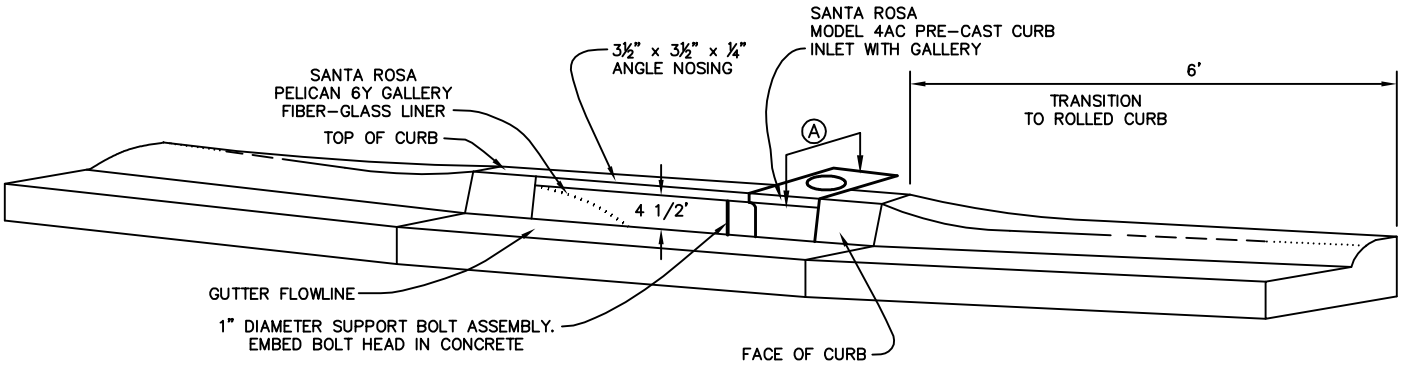

PELICAN PICTORIAL VIEW AND CURB TRANSITIONS

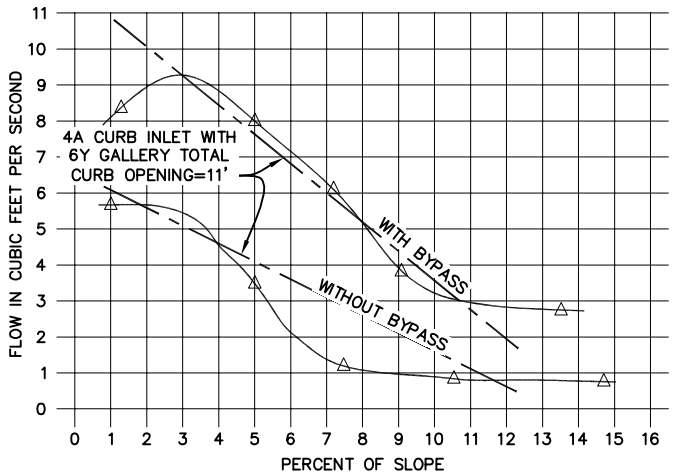

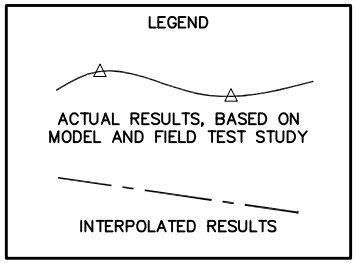

4A CURB INLET DRAINAGE CAPACITY WITH 6Y PELICAN GALLERY

NOTES:

1. PORTLAND CEMENT CONCRETE SHALL BE 3000 P.S.I. AT 28 DAYS.
2. PELICAN GALLERY TO BE SANTA ROSA'S 6Y GALLERY ASSEMBLY WITH THE MODEL 4AC PRE-CAST CURB INLET OR EQUIVALENT.
3. INLET SHOULD BE BROUGHT TO LINE AND GRADE BY ALIGNING NOSING WITH CURB FACE BOARD.
4. FOR ROLLED CURB AND GUTTER, 6' TRANSITIONS TO VERTICAL CURB ARE REQUIRED ON BOTH SIDES OF INLET.
5. STRINGLINE TOP OF ROLLED CURB AND GUTTER 6' BEYOND ALL OPENINGS AND HOLD THAT ELEVATION FOR TOP FRONT OF CURB, DEPRESSING FLOWLINE CORRESPONDINGLY.

NOT TO SCALE

GENERATED	REVISIONS			APPROVED:
NO.				Scott Claudel
DATE: 3/17/90				DIRECTOR OF TRANSPORTATION
DESIGNED: TMA				Steven K. Payne C33427
DRAWN: JM/SR/BS				SENIOR CIVIL ENGINEER P.E. NO.
CHECKED: SKP				
APPROVED:				

EL DORADO COUNTY
DEPARTMENT OF TRANSPORTATION
DESIGN STANDARDS

PELICAN GALLERY
SANTA ROSA
MODEL 6Y
MODEL 4AC
CURB INLET

STD. PLAN
115C

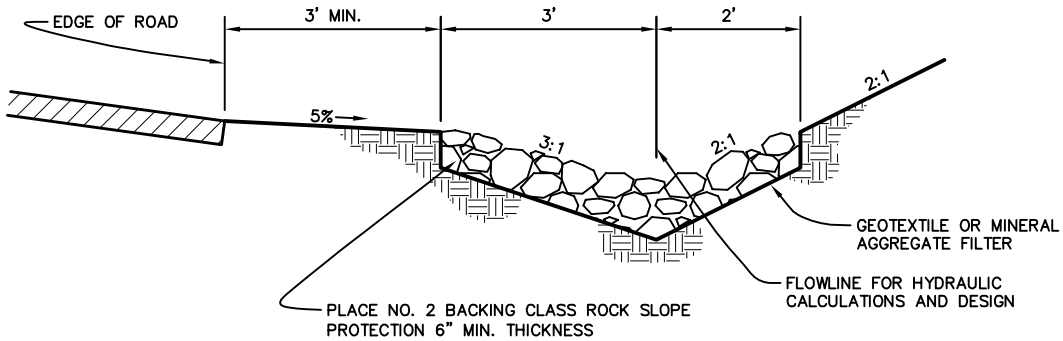

ROADWAY ROCK LINED DITCH DETAIL

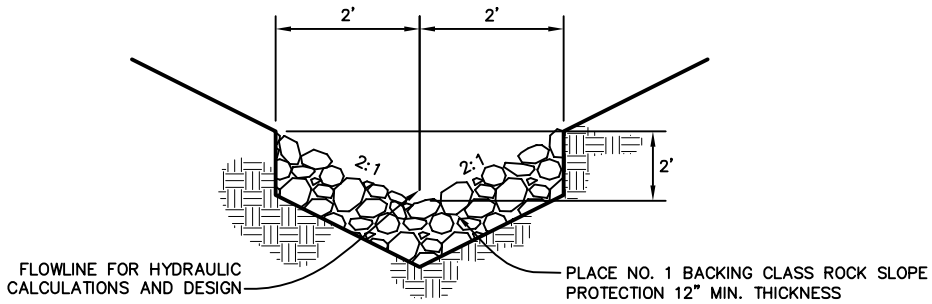

ROCK LINED DITCH DETAIL

NOTES:

1. ROCK LINED DITCHES ARE USED AS SPECIFIED IN EL DORADO COUNTY GRADING ORDINANCES.
2. ROCK LINING SHALL NOT BE HIGHER THAN ROADWAY OR ELEVATION OF SHOULDER.
3. WHERE A 6:1 SLOPE EXISTS, USE A MINIMUM OF 6' OR A MAXIMUM OF 18' SIZED ROCKS.
4. GROUT WILL BE USED WHEN ROCK RIP-RAP IS PLACED ON FILL SLOPES, IF SLOPES ARE EXCEEDING 2:1, WITHIN 10 FEET OF A CULVERT WITHOUT A FLARED END SECTION, OR WHEN VELOCITIES EXCEED 15 FT. PER SECOND.
5. THE ENDS OF BOTH THE ROCK LINED AND GROUTED ROCK LINED DITCHES TO BE KEYED IN A MINIMUM OF ONE FOOT.

NOT TO SCALE

GENERATED	REVISIONS			APPROVED:	EL DORADO COUNTY		ROCK LINED DITCH	STD. PLAN
NO.					DEPARTMENT OF TRANSPORTATION			
DATE: 03/17/90				DIRECTOR OF TRANSPORTATION	DESIGN STANDARDS			118
DESIGNED:								
DRAWN: JM/SR/BS								
CHECKED: SKP				C33427				
APPROVED:				SENIOR CIVIL ENGINEER P.E. NO.				

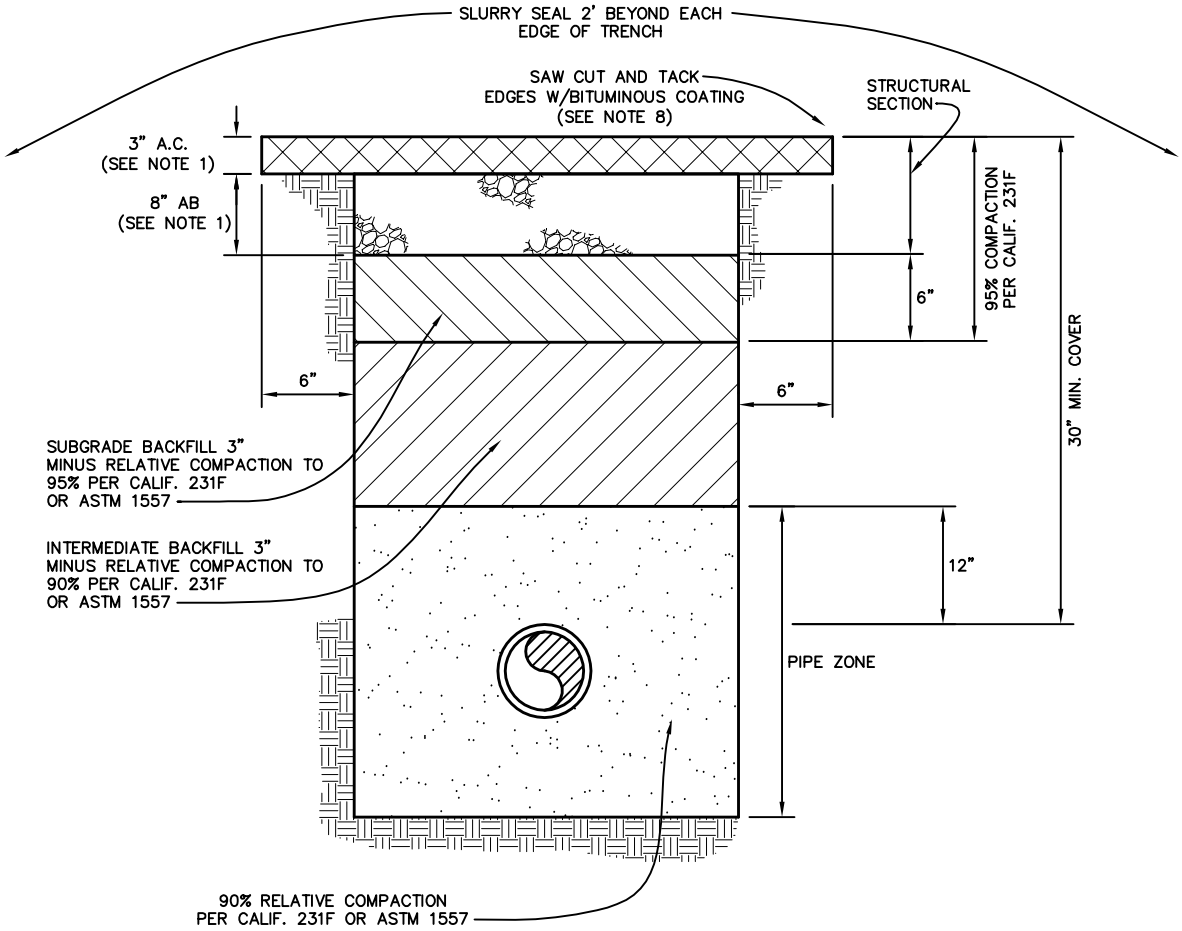

NOTES:

1. STRUCTURAL SECTION SHALL BE 3" A.C. AND 8" AB MINIMUM, OR MATCH EXISTING THICKNESS.
2. PONDING OR JETTING NOT PERMITTED UNDER OR WITHIN 2' OF EXISTING ROADWAY.
3. THE TRENCH WILL BE PAVED WITH ASPHALT WHEN ENTERING ROADSIDE DITCHES AND GUTTERS WITH A GRADE OF 5% OR BETTER. AT TAHOE, PAVE ALL TRENCHES ENTERING DITCHES.
4. IN ROADWAY FILL STEEPER THAN 4:1, THE OUTER EDGE OF TRENCH SHALL BE AT LEAST 18" FROM HINGE POINT. FOR CABLE PLOWING OPERATIONS, IT SHALL BE 36".
5. LONGITUDINAL PAVEMENT REPLACEMENT WILL BE FROM THE INNER CUT LINE TO THE EDGE OF THE EXISTING PAVEMENT, WHEN THE REMAINING PAVEMENT WIDTH WOULD BE LESS THAN 3 FEET. ON COLLECTOR ROADS, PAVEMENT SHALL BE REPLACED FROM CENTERLINE.
6. REPLACE ALL OBLITERATED PAVEMENT MARKINGS.
7. ON COLLECTOR ROADS, INTERMEDIATE BACKFILL WILL BE 3/4" AB COMPACTED TO 95%. A CONCRETE/SAND SLURRY (2 SACK) MAY BE USED IN PLACE OF 3/4" AB.
8. FINAL PAVEMENT REPLACEMENT WILL HAVE A UNIFORM WIDTH AND WILL BE APPROVED BY AN INSPECTOR BEFORE SAW CUTTING.
9. SEE FURTHER CONDITIONS ATTACHED TO PERMIT.

NOT TO SCALE

GENERATED	REVISIONS			APPROVED:
NO.				Scott Clardel
DATE: 03/14/90				DIRECTOR OF TRANSPORTATION
DESIGNED:				
DRAWN: JM/SR/BS				Steven K Payne C33427
CHECKED: SKP				SENIOR CIVIL ENGINEER P.E. NO.
APPROVED:				

EL DORADO COUNTY
DEPARTMENT OF TRANSPORTATION
DESIGN STANDARDS

UNDERGROUND TRENCH DETAIL
IN A.C. SECTIONS ONLY

STD. PLAN
119

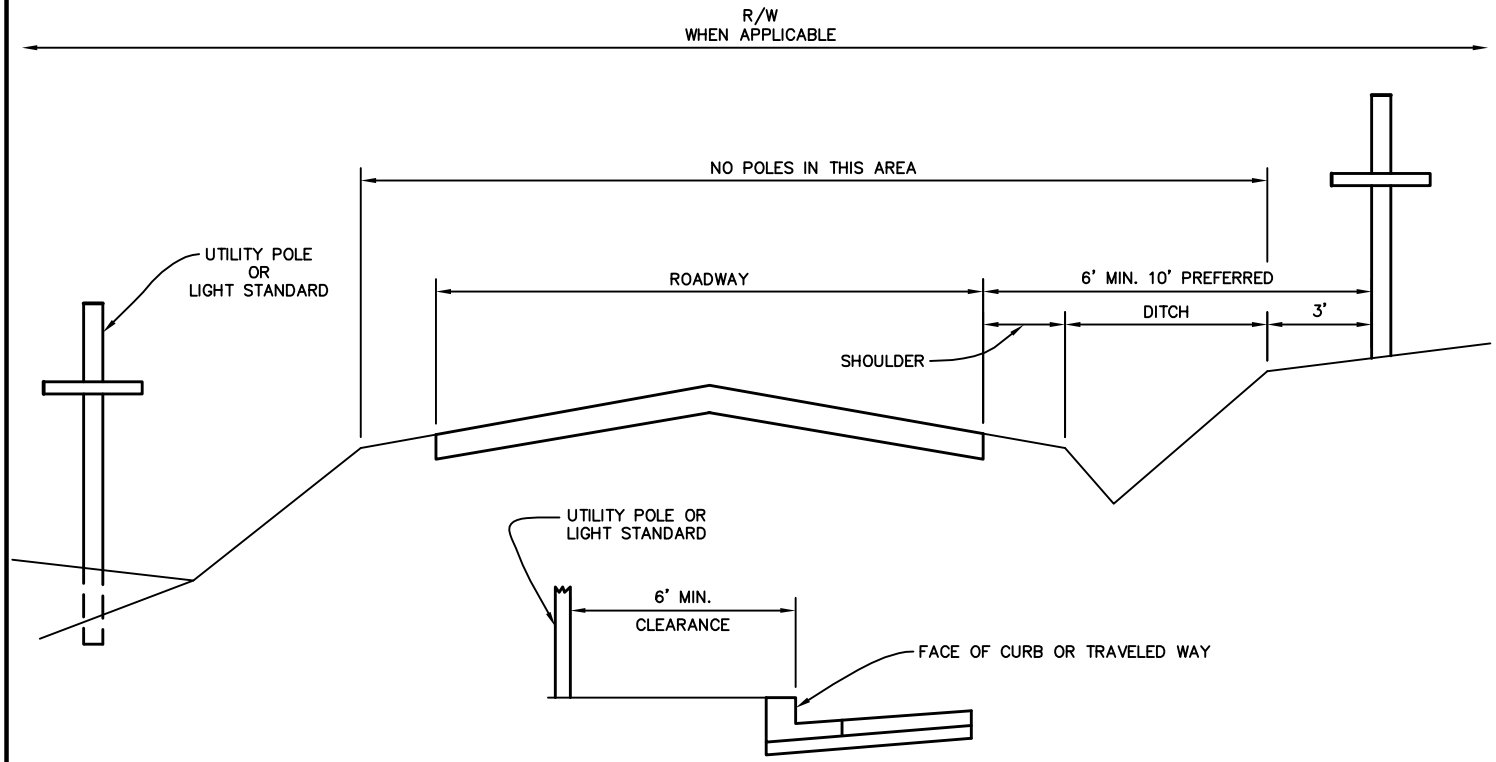

NOTES:

1. POLES MAY BE LOCATED AT THE TOE OF FILLS WHICH ARE MORE THAN 4 FEET IN HEIGHT. POLES SHOULD EXTEND TO NATIVE GROUND WHERE PRACTICAL.
2. POLES MAY BE LOCATED ON CUT OR FILL SLOPES WHEN THE ELEVATION OF THEIR BASE IS 4 FEET ABOVE OR BELOW THE EDGE OF ROADWAY.
3. POLES SHOULD BE LOCATED AS FAR AS PRACTICAL FROM THE ROADWAY AND BEYOND THE SHOULDER & DITCH AREA, BUT MUST BE AT LEAST 6 FEET FROM THE EDGE OF ROADWAY AND 10 FEET PREFERRED.
4. POLES MAY BE LOCATED CLOSER TO THE ROADWAY IF MOTORISTS ARE PROTECTED FROM POLES BY METAL BEAM GUARD RAILING.
5. POLES AND GUYS MAY NOT BE LOCATED ON THE ROADWAY OR IN THE ROADSIDE DITCH OR DRIVEABLE SHOULDER.
6. NO POLES WILL BE LOCATED WITHIN ANY RADIUS PORTION OF A DRIVEWAY CONNECTION OR ROADWAY.

NOT TO SCALE

GENERATED	REVISIONS			APPROVED:	EL DORADO COUNTY		UTILITY POLE LOCATIONS	STD. PLAN
NO.				Scott Clendel	DEPARTMENT OF TRANSPORTATION			
DATE: 12/30/89				DIRECTOR OF TRANSPORTATION	DESIGN STANDARDS			120
DESIGNED:				Steven K Dupre C33427				
DRAWN: JM/SR/BS				SENIOR CIVIL ENGINEER P.E. NO.				
CHECKED: SKP								
APPROVED:								

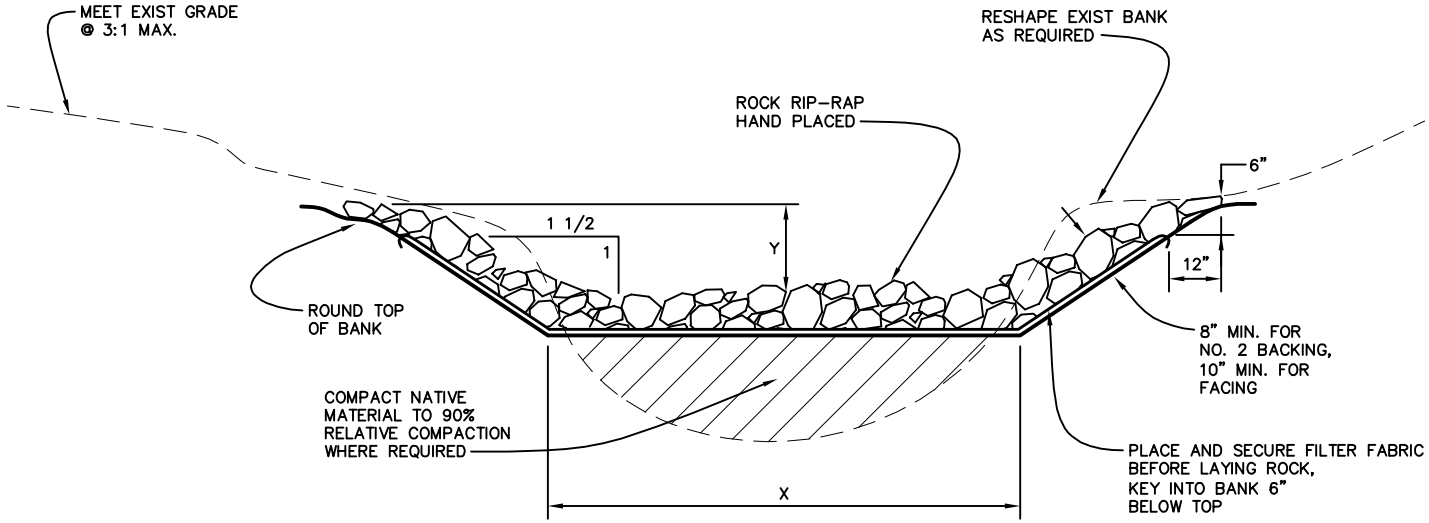

CHANNEL TYPE	WIDTH, X	DEPTH, Y	ROCK CLASS
A	1'	1'	NO. 1 BACKING
B	2'	1 1/2'	NO. 1 BACKING
C	2'	2'	NO. 1 BACKING

NOTES:

1. ROCK LINED CHANNELS SHALL NOT BE USED UNLESS WARRANTED BY HYDRAULIC CALCULATIONS.
2. ALL ROCK SHALL BE ANGULAR WITH A MINIMUM OF 2 FACES.
3. GROUT WILL BE USED WHEN ROCK RIP RAP IS PLACED ON FILL SLOPES, IF SLOPES EXCEED 2:1, IF WITHIN 10 FEET OF A CULVERT WITHOUT A FLARED END SECTION, OR WHEN ROCK IS PLACED ON ANY FILL.
4. A 24" KEY WILL BE PLACED AT THE END OF THE SWALE AREA.

NOT TO SCALE

GENERATED	REVISIONS		
NO.			
DATE: 03/15/90			
DESIGNED: JH			
DRAWN: JM/SR/BS			
CHECKED:			
APPROVED:			

APPROVED:

DIRECTOR OF TRANSPORTATION

SENIOR CIVIL ENGINEER — P.E. NO. C33427

EL DORADO COUNTY
DEPARTMENT OF TRANSPORTATION
DESIGN STANDARDS

ROCK LINED CHANNELS

STD. PLAN
T-501

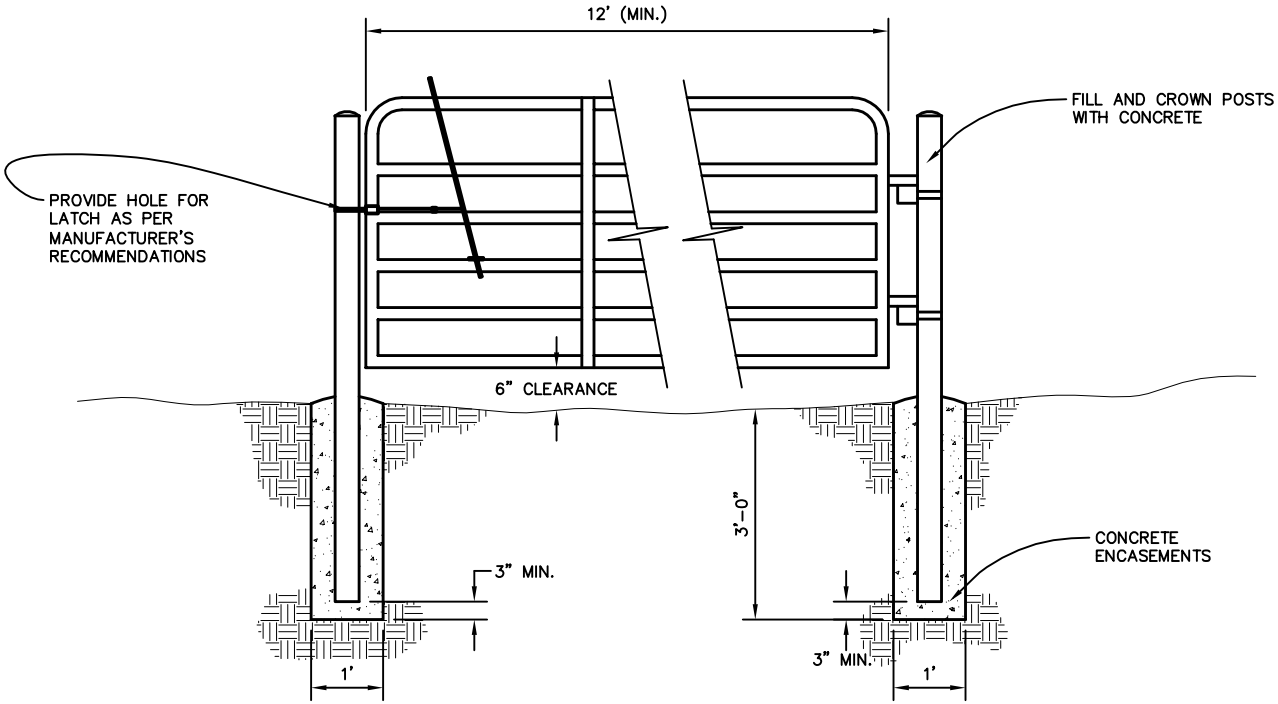

NOTES:

1. CONCRETE ENCASEMENTS SHALL HAVE A 1" CROWN ABOVE GROUND LEVEL.
2. 12' WIDE GATE OF 16 GAGE, 2" DIAMETER TUBE CONSTRUCTION WITH MOUNTING HARDWARE AND SINGLE, LOCKABLE PISTON LEVER LATCH BY WESTGUARD INDUSTRIES OR EQUIVALENT.
3. GATE POSTS 4" DIAMETER SCHEDULE 40 GALVANIZED STEEL.

NOT TO SCALE

GENERATED	REVISIONS			APPROVED:	EL DORADO COUNTY DEPARTMENT OF TRANSPORTATION DESIGN STANDARDS	GATE DETAIL	STD. PLAN T-502
NO.				Scott Clardel			
DATE: 3/12/90				DIRECTOR OF TRANSPORTATION			
DESIGNED: JH				Steven K. Payne C33427			
DRAWN: JM/SR/BS				SENIOR CIVIL ENGINEER P.E. NO.			
CHECKED:							
APPROVED:							

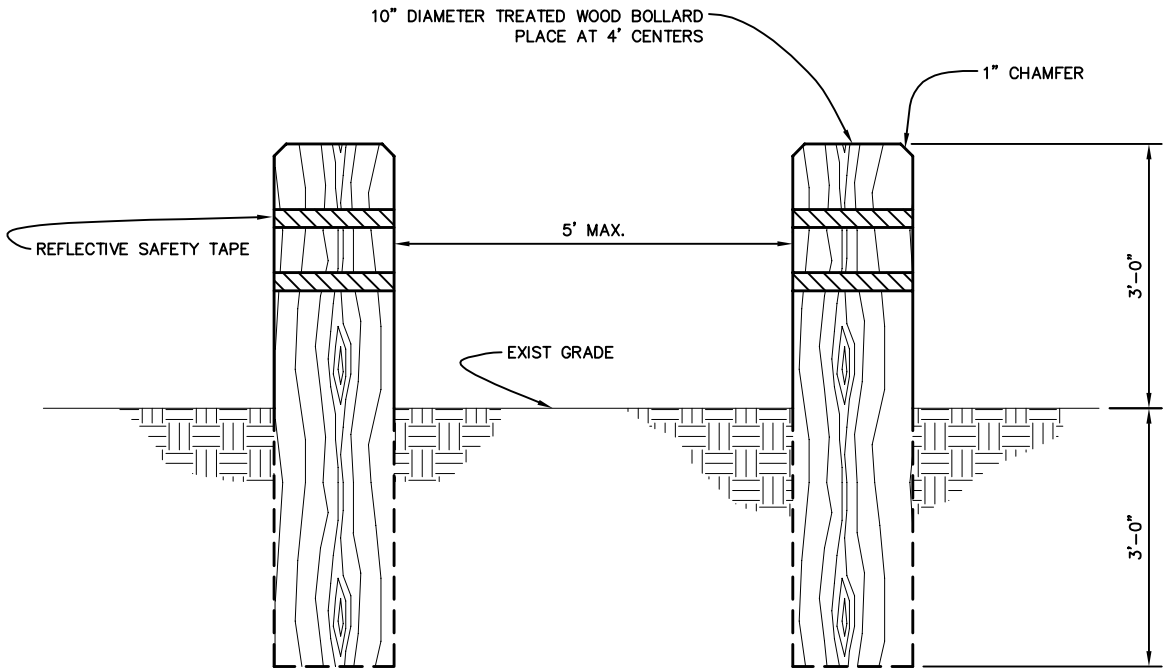

NOTES:

1. WHERE USED ON DEAD END ROADS, A RED WARNING SIGN SHALL BE INSTALLED PER STANDARD PLAN 105C.

NOT TO SCALE

GENERATED	REVISIONS			APPROVED:	EL DORADO COUNTY DEPARTMENT OF TRANSPORTATION DESIGN STANDARDS	VEHICLE BARRIER	STD. PLAN T-503
NO.				Scott Clardel			
DATE: 3/12/90				DIRECTOR OF TRANSPORTATION			
DESIGNED: JH				Steven K. Payne C33427			
DRAWN: JM/SR/BS				SENIOR CIVIL ENGINEER P.E. NO.			
CHECKED:							
APPROVED:							

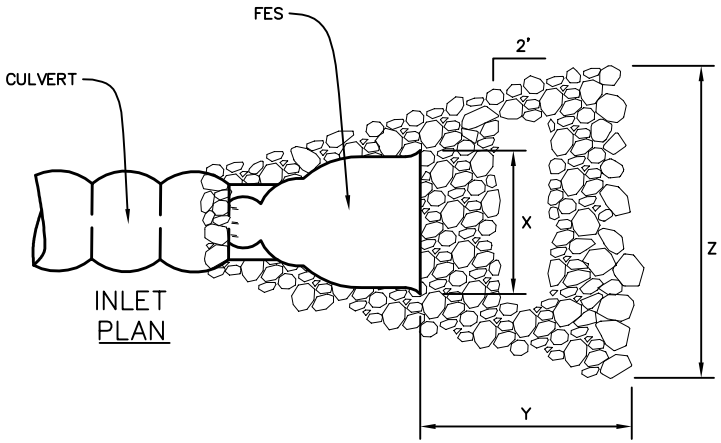

INLET PLAN

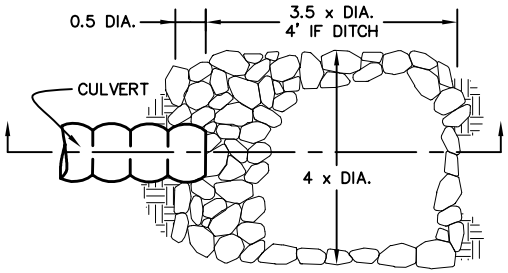

OUTLET PLAN

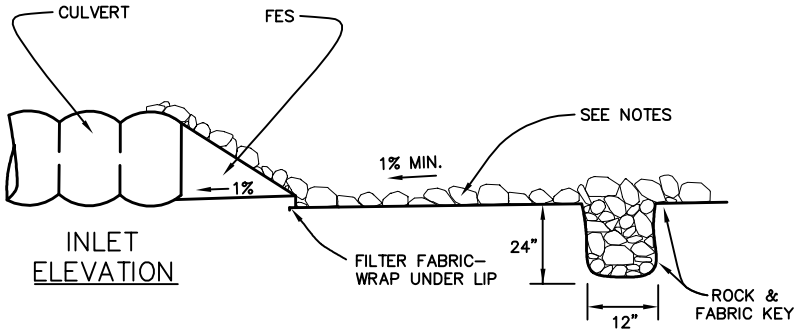

INLET ELEVATION

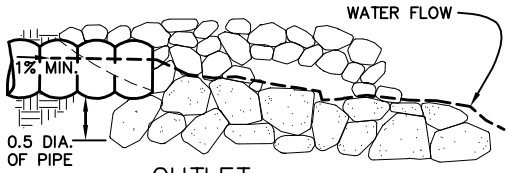

OUTLET ELEVATION

ROCK CLASS	PIPE ø IN.	(3 x PIPE ø) X, FT	(4x) Y, FT	(5x) Z, FT
NO. 1 BACKING	12	3	4	5
NO. 1 BACKING	18	4.5	6	7.5
NO. 1 BACKING	24	6	8	10
NO. 1 BACKING	30	7.5	10	12.5
NO. 1 BACKING	36	9	12	15

NOTES:

1. HAND PLACE ROCK.
2. ALL ROCK SHALL BE ANGULAR AND HAVE TWO FACES.
3. WHERE SLOPES OF OUTLET EXCEEDS 5%, A SEDIMENT BOWL OR ENERGY DISSIPATER SHALL BE REQUIRED.
4. FLARED END SECTION AND ROCK SLOPE PROTECTION WILL SLOPE AT A MINIMUM OF 1% INTO OR OUT OF THE CULVERT.
5. 12" X 24" KEY TO BE PLACED FOR BOTH INLET AND OUTLET APPLICATIONS.
6. ON OUTLET APPLICATIONS, 50% OF THE ROCK SHALL BE LARGER THAN HALF THE DIAMETER OF THE PIPE.

NOT TO SCALE

GENERATED	REVISIONS			APPROVED:
NO.				Scott Clardel
DATE: 3/12/90				DIRECTOR OF TRANSPORTATION
DESIGNED: JH				Steven K. Payne C33427
DRAWN: JM/SR/BS				SENIOR CIVIL ENGINEER P.E. NO.
CHECKED:				
APPROVED:				

EL DORADO COUNTY
DEPARTMENT OF TRANSPORTATION
DESIGN STANDARDS

ROCK INLET/OUTLET PROTECTION

STD. PLAN
T-504

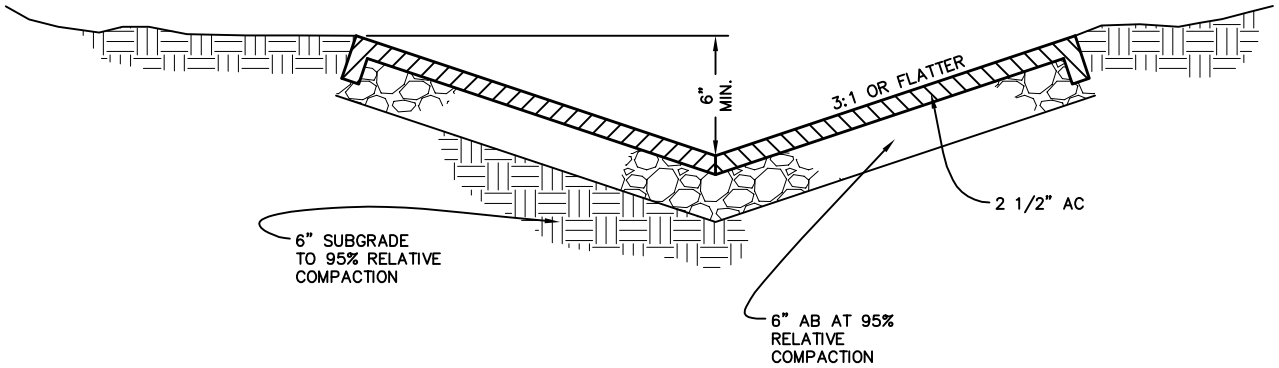

NOTES:

1. ABOVE 4000 FT. ELEVATION AC SHALL BE REPLACED WITH CLASS B CONCRETE PER CALTRANS SPECIFICATIONS.
2. KEY IN END 1 FT. MIN. OR EQUAL TO DEPTH OF DITCH.
3. PLACE FULL WIDTH KEY EVERY 50' FOR LONG RUNS WITH STEEPER DITCH SLOPES.

NOT TO SCALE

GENERATED	REVISIONS			APPROVED:	EL DORADO COUNTY		PAVED SWALE	STD. PLAN
NO.				Scott Clardel	DEPARTMENT OF TRANSPORTATION			
DATE: 03/12/90				DIRECTOR OF TRANSPORTATION				
DESIGNED: JH				Steven K. Payne C33427	DESIGN STANDARDS			T-505
DRAWN: JM/SR/BS								
CHECKED:								
APPROVED:				SENIOR CIVIL ENGINEER P.E. NO.				

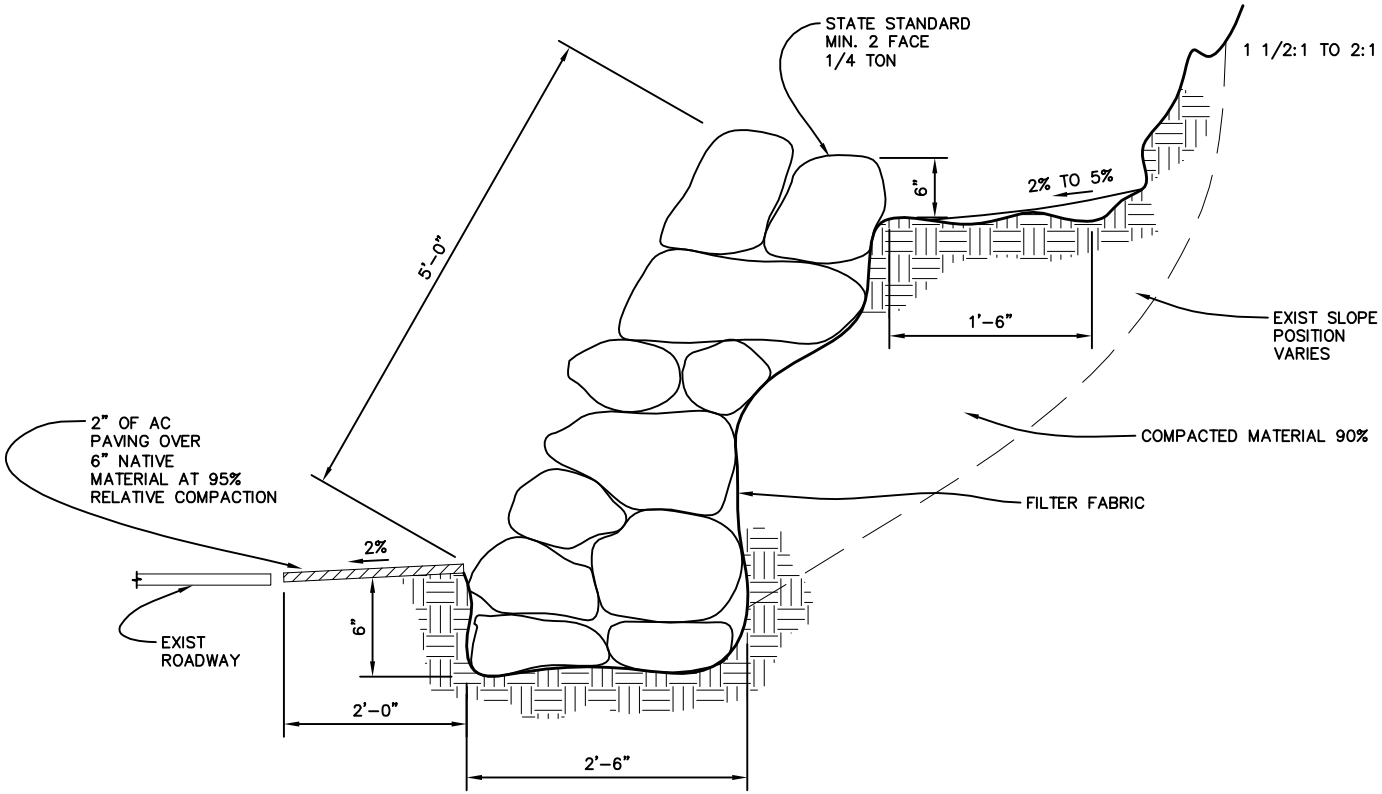

NOTES:

1. TAHOE BASIN ONLY, AND ONLY WHERE REPAIRING EXISTING.

NOT TO SCALE

GENERATED	REVISIONS			APPROVED:	EL DORADO COUNTY		ROCK BREAST WALL	STD. PLAN
NO.				Scott Clardel	DEPARTMENT OF TRANSPORTATION			
DATE: 3/12/90				DIRECTOR OF TRANSPORTATION				
DESIGNED: JH				Steven K. Payne C33427	DESIGN STANDARDS			T-506
DRAWN: JM/SR/BS								
CHECKED:								
APPROVED:				SENIOR CIVIL ENGINEER P.E. NO.				

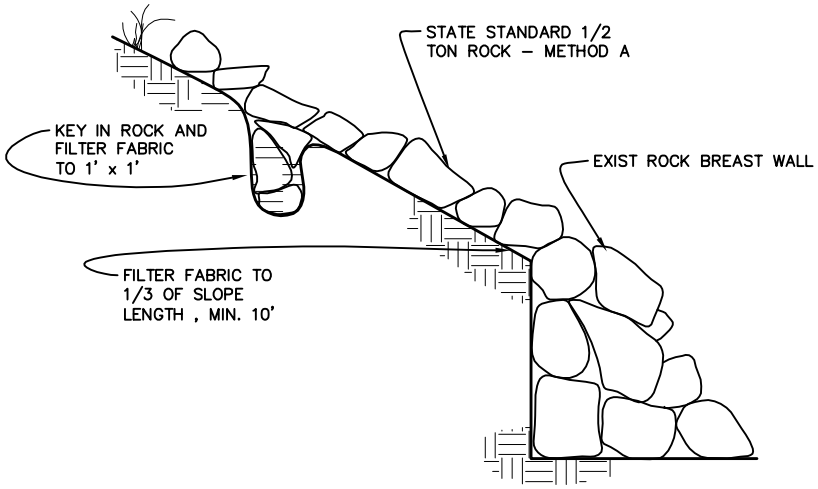

IF ROCK SITS ABOVE EXISTING ROCK WALL

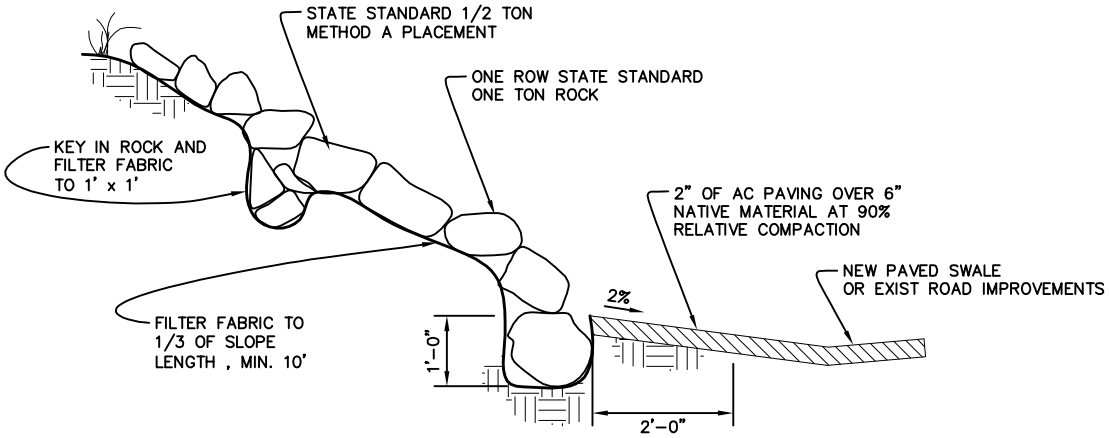

NOTES:

1. TAHOE BASIN ONLY, WHEN REPAIRING EXISTING CONDITIONS.

NOT TO SCALE

GENERATED	REVISIONS			APPROVED:	EL DORADO COUNTY		ROCK SLOPE PROTECTION	STD. PLAN
NO.				Scott Clendel	DEPARTMENT OF TRANSPORTATION			
DATE: 03/12/90				DIRECTOR OF TRANSPORTATION				
DESIGNED: JH				Steven K. Payne C33427	DESIGN STANDARDS			T–507
DRAWN: JM/SR/BS								
CHECKED:								
APPROVED:				SENIOR CIVIL ENGINEER P.E. NO.				

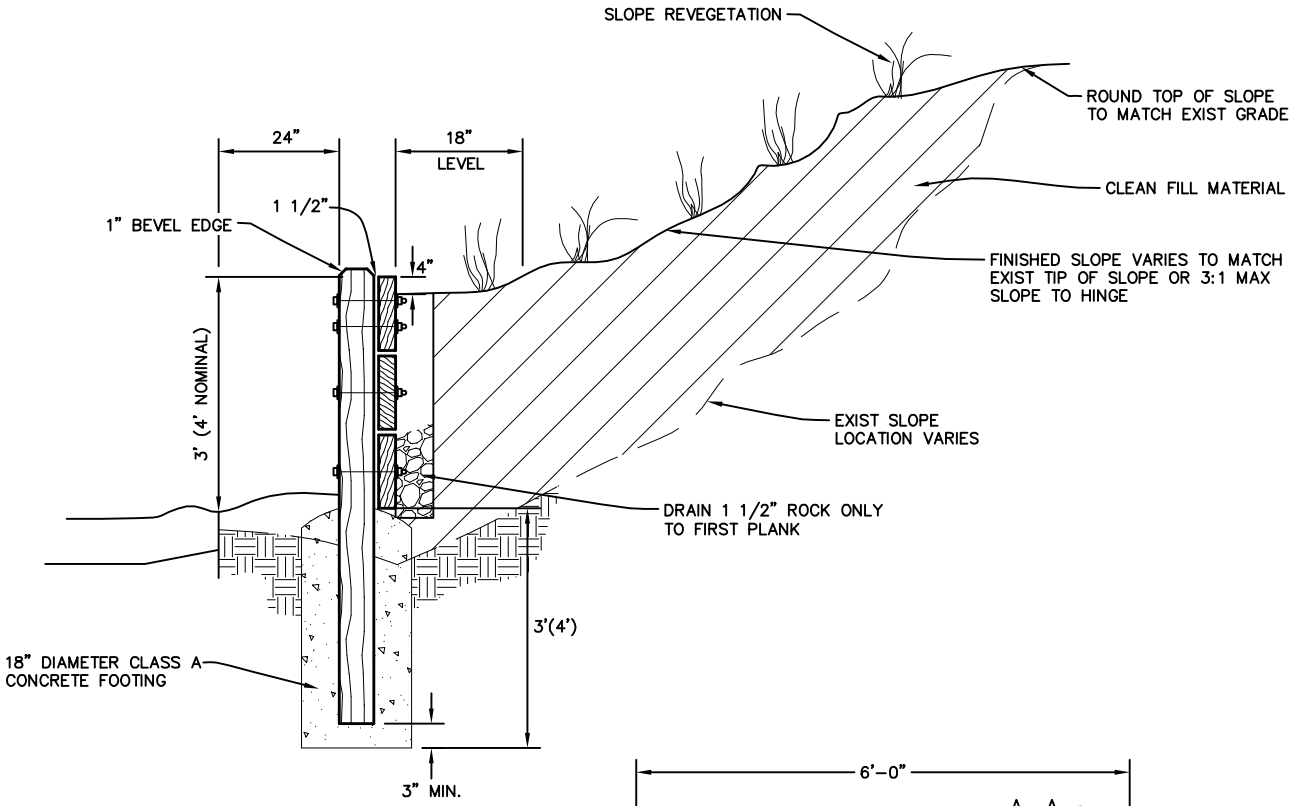

SECTION A–A

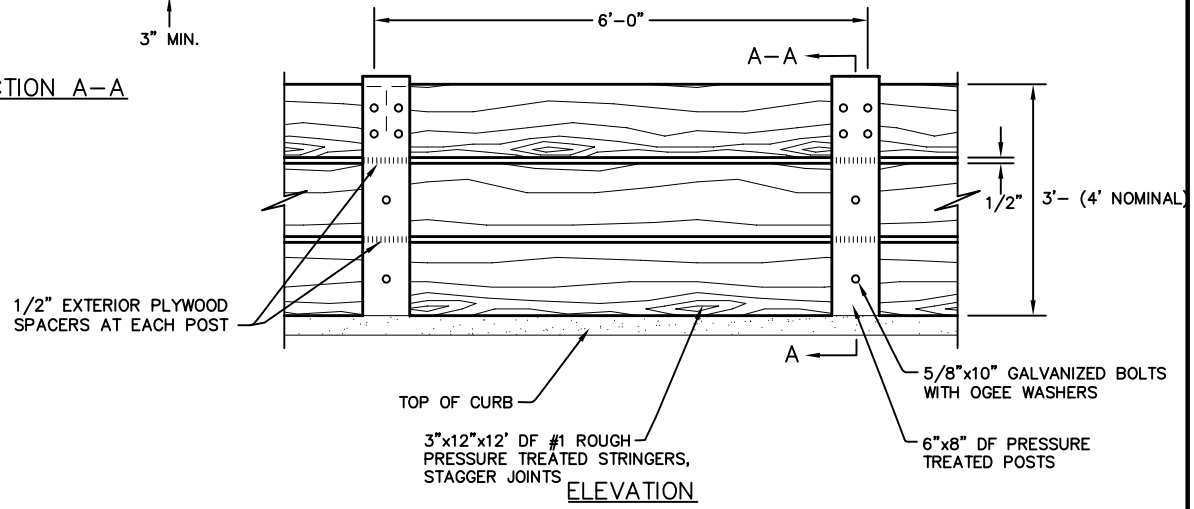

ELEVATION

NOTES:

1. DEPTH OF FOOTING MAY BE REDUCED TO 2 FEET AS DIRECTED BY ENGINEER.
2. USE 12' LENGTHS FOR STRINGERS. 6' STRINGERS ALLOWABLE FOR RADII AND TRANSITIONS WHERE NECESSARY.
3. PLACE 20 SQ. FT. OF NO. 2 BACKING AS SLOPE PROTECTION AT THE END OF EACH WALL.
4. DIMENSIONS IN PARENTHESIS FOR 4' RETAINING WALL APPLICATIONS.

NOT TO SCALE

GENERATED	REVISIONS			APPROVED:
NO.				Scott Clendel
DATE: 3/17/90				DIRECTOR OF TRANSPORTATION
DESIGNED: JH				Steven K. Payne C33427
DRAWN: JM/SR/BS				SENIOR CIVIL ENGINEER P.E. NO.
CHECKED:				
APPROVED:				

EL DORADO COUNTY
DEPARTMENT OF TRANSPORTATION
DESIGN STANDARDS

3' AND 4' TIMBER RETAINING WALL

STD. PLAN
T–508